SICIS®
HOME COLLECTION

LIGHTING
COLLECTION

MADE IN ITALY

LIGHTING COLLECTION

LIGHT UP
YOUR LIFE

SICIS

INDEX

302 **Amalasonte**
66 **Amaretto**
184 **Andromeda**
102 **Ballet**
278 **Bauta**
44 **Bohème**
230 **Dan**
302 **Désideria**
76 **Drop**
266 **Element-K**
272 **Étoile**
196 **Fluxus**
128 **Gemma**
96 **Giacarta**
34 **Giunco**
302 **Hélie**
302 **Honoria Galla Placidia**
14 **Katana**
120 **Lescot**
302 **Licinia Valérie**
328 **Lumière**
288 **Odeon**
174 **Odissey**
322 **Operà**
158 **Oscar**
314 **Plaza**
54 **Polo**
216 **Rigel**
248 **Selfie**
236 **Siam**
224 **Tellus**
302 **Théodelinde Rosemonde**
144 **Tris**
206 **Venus**
256 **Visconti**

OUTDOOR
44 **Bohème**
76 **Drop**
96 **Giacarta**
296 **Pagoda**

334 HOSPITALITY

366 MATERIALS & FINISHINGS

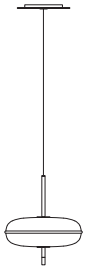

66
Amaretto

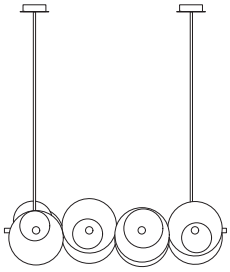

184
Andromeda

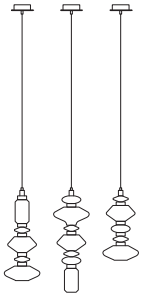

102
Ballet

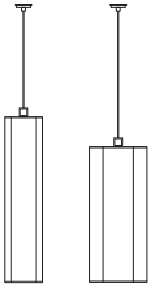

278
Bauta

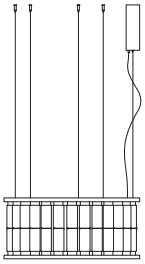

44
Bohème

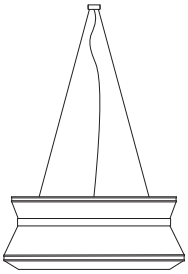

230
Dan

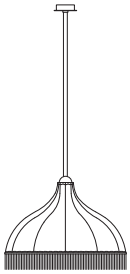

302
Désideria

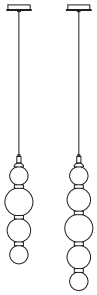

76
Drop

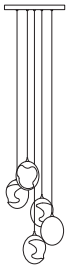

266
Element-K

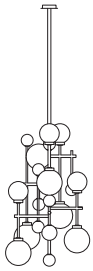

196
Fluxus

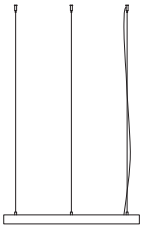

128
Gemma

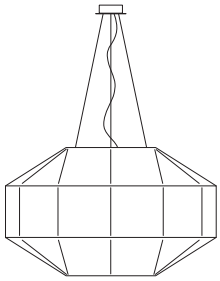

96
Giacarta

34
Giunco

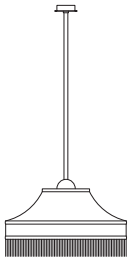

302
Hélie

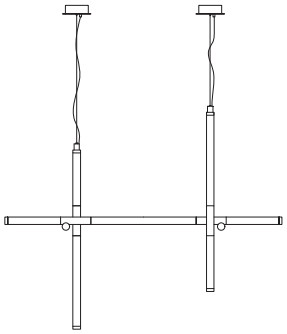

14
Katana

328
Lumière

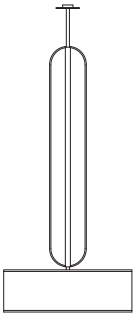

288
Odeon

174
Odissey

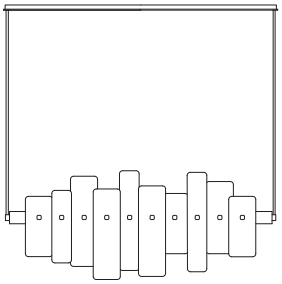

158
Oscar

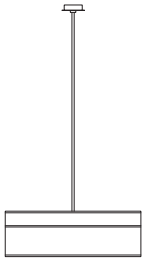

314
Plaza

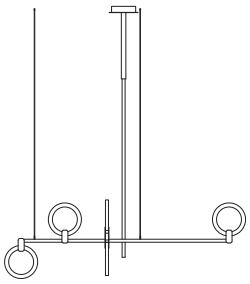

54
Polo

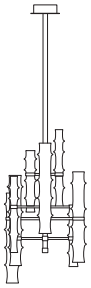

236
Siam

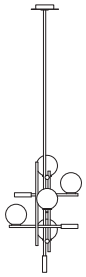

144
Tris

206
Venus

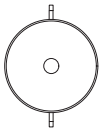

66
Amaretto

184
Andromeda

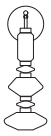

102
Ballet

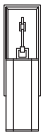

278
Bauta

76
Drop

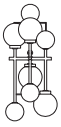

196
Fluxus

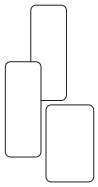

128
Gemma

14
Katana

174
Odissey

322
Operà

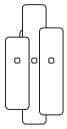

158
Oscar

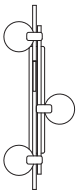

54
Polo

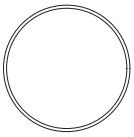

248
Selfie

236
Siam

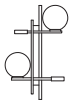

144
Tris

206
Venus

256
Visconti

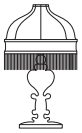

302
Amalasonte

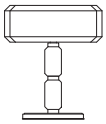

102
Ballet

76
Drop

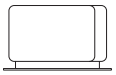

128
Gemma

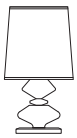

120
Lescot

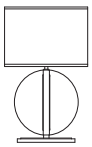

288
Odeon

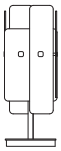

158
Oscar

216
Rigel

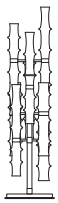

236
Siam

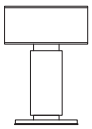

224
Tellus

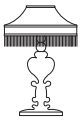

302
Théodelinde Rosemonde

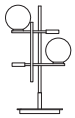

144
Tris

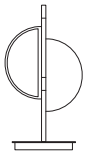

206
Venus

256
Visconti

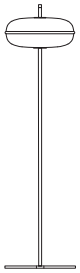

66
Amaretto

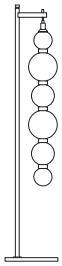

76
Drop

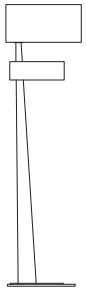

272
Étoile

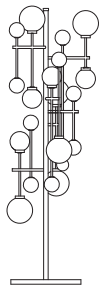

196
Fluxus

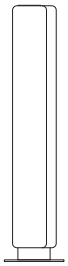

128
Gemma

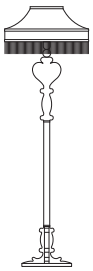

302
Honoria Galla Placidia

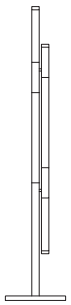

14
Katana

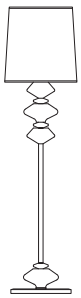

120
Lescot

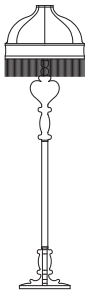

302
Licinia Valérie

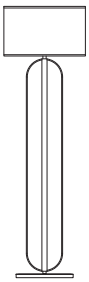

288
Odeon

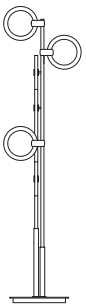

54
Polo

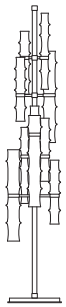

236
Siam

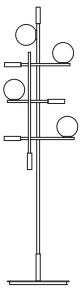

144
Tris

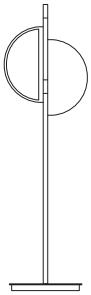

206
Venus

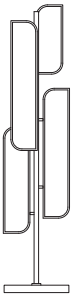

256
Visconti

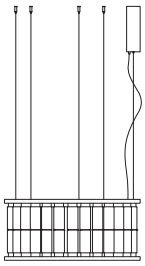

44
Bohème

76
Drop Battery

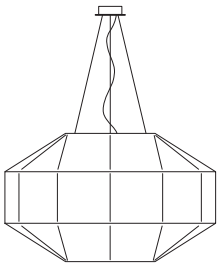

96
Giacarta

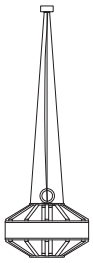

296
Pagoda

Progettare la luce significa non solo considerare l'aspetto funzionale dell'illuminazione, ma anche abbracciare una dimensione più ampia che crea una sensazione di comfort, mettendo in risalto l'insieme e rendendo unico ogni spazio.
SICIS è un'azienda con una vocazione e una cultura internazionali che crea soluzioni di illuminazione decorative caratterizzate dal Made in Italy di alta qualità e manifattura.

Nella continua ricerca di un'estetica raffinata, SICIS ha realizzato le sue nuove collezioni per l'illuminazione degli interni e degli esterni, reinterpretando lo stile classico con un'apertura verso le avanguardie artistiche e una padronanza delle tecniche di lavorazione in sinergia ad un team specializzato. In ogni corpo illuminante si riscontra una meticolosa cura dei dettagli e l'utilizzo di materiali come il vetro soffiato, le finiture cromate e i metalli speciali, la Vetrite retroilluminata, oltre agli inserti in legno pregiato e al mosaico in materiali preziosi quali l'oro e il platino.

Le collezioni propongono prodotti originali in cui si fondono design, arte e sperimentazione, cultura del vivere e dell'arredare, caratterizzati da uno stile personale e unico.

Designing lighting means not only considering the functional aspect of illumination but embracing a broader dimension that creates a sense of comfort, enhances the overall atmosphere, and makes each space unique.
SICIS is a company with an international vocation and culture, specializing in high-quality decorative lighting solutions characterized by Italian craftsmanship.

In its continuous pursuit of refined aesthetics, SICIS has created new collections for both indoor and outdoor lighting, reinterpreting classical styles while incorporating elements of artistic avant-garde and utilizing advanced manufacturing techniques with a specialized team.
Each lighting fixture showcases meticulous attention to detail and utilizes materials such as blown glass, chrome finishes, special metals, backlit Vetrite, as well as inserts of fine wood and mosaics made from precious materials like gold and platinum.

The collections offer original products that blend design, art, and experimentation, reflecting a culture of living and furnishing, characterized by a personal and unique style.

LIGHTING
COLLECTION

SICIS

Design by Massimiliano Raggi

KATANA

Collezione di lampade composte da elementi cilindrici disposti ortogonalmente a creare come uno shanghai di geometrie astratte nello spazio. La struttura in metallo con preziose finiture e i diffusori sono composti da tubi in Vetrite in finitura opalescente.

A collection of lamps composed of cylindrical elements arranged orthogonally to create a game of abstract geometries in space, reminiscent of pick-up sticks. The metal structure with precious finishes and the diffusers are made of Vetrite tubes with an opalescent finish.

KATANA ceiling lamp horizontal
SOO 01, 02, 03, 04, 05

SICIS

KATANA ceiling lamp vertical SO 01, 02, 03, 04, 05
KATANA ceiling lamp SOT 02

SICIS

KATANA ceiling lamp SOT 01

SICIS

KATANA chandelier CHAND 01
KATANA wall sconce WS 03

KATANA floor lamp FLAMP 01, 02
KATANA floor lamp FLAMP 03 (ON & OFF)

ON

OFF

KATANA wall sconce lamp WS 04

SICIS

KATANA chandelier

CHAND 01
160 Watt STRIP LED 24V
WARM WHITE 3000K
19200 lm
IP 20
220 V Different voltage on request
CE Certification

KATANA ceiling lamp horizontal

SOO 01
22 Watt STRIP LED 24 V
WARM WHITE 3000K
2640 lm
IP 20
220 V Different voltage on request
CE Certification

SOO 02
17 Watt STRIP LED 24 V
WARM WHITE 3000K
2040 lm
IP 20
220 V Different voltage on request
CE Certification

SOO 03
18 Watt STRIP LED 24 V
WARM WHITE 3000K
2160 lm
IP 20
220 V Different voltage on request
CE Certification

SOO 04
12 Watt STRIP LED 24 V
WARM WHITE 3000K
1440 lm
IP 20
220 V Different voltage on request
CE Certification

SOO 05
23 Watt STRIP LED 24 V
WARM WHITE 3000K
2360 lm
IP 20
220 V Different voltage on request
CE Certification

Collezione / *Collection*

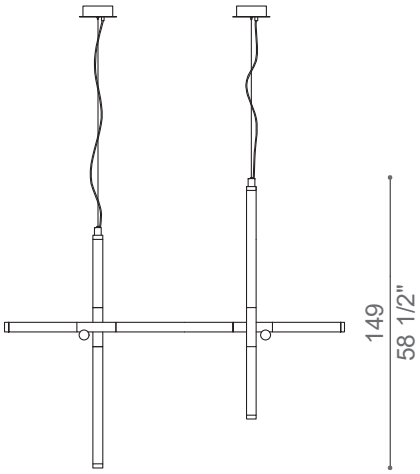

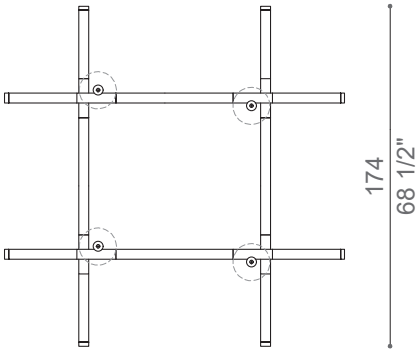

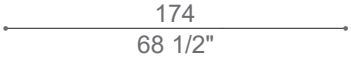

CHAND 01

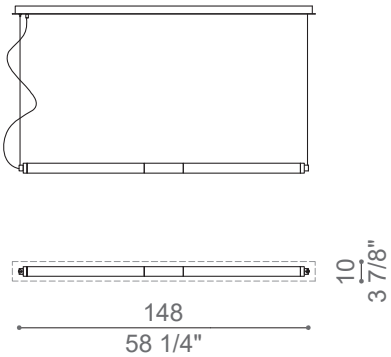

SOO 01

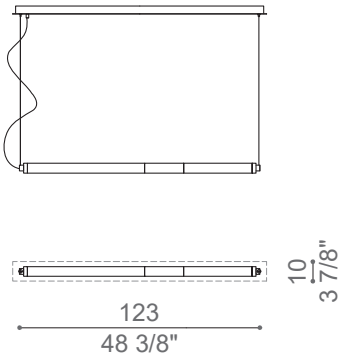

SOO 02

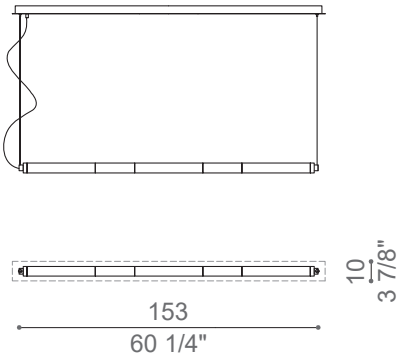

SOO 03

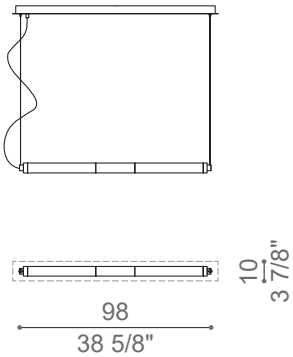

SOO 04

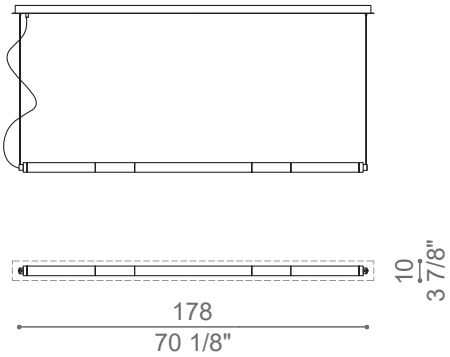

SOO 05

Finiture / *Finishes*

Struttura / *Structure*

Metallo champagne lucido
Champagne polished metal

Metallo champagne opaco
Champagne matt metal

Metallo cromo lucido
Chrome polished metal

Metallo nichel nero lucido
Polished black nickel metal

Diffusore / *Diffuser*

Vetrite opalescente retroilluminata
Vetrite opalescent backlit

Disponibile con tutte le finiture opalescenti della collezione Vetrite.
Available with all the opalescent finishes of the Vetrite collection.

VETRITE®
Go to the WebSite

KATANA ceiling lamp vertical

SO 01
6 Watt STRIP LED 24 V
WARM WHITE 3000K
720 lm
IP 20
220 V Different voltage on request
CE Certification

SO 02
11 Watt STRIP LED 24 V
WARM WHITE 3000K
1320 lm
IP 20
220 V Different voltage on request
CE Certification

SO 03
12 Watt STRIP LED 24 V
WARM WHITE 3000K
1440 lm
IP 20
220 V Different voltage on request
CE Certification

SO 04
17 Watt STRIP LED 24 V
WARM WHITE 3000K
2040 lm
IP 20
220 V Different voltage on request
CE Certification

SO 05
17 Watt STRIP LED 24 V
WARM WHITE 3000K
2040 lm
IP 20
220 V Different voltage on request
CE Certification

KATANA ceiling lamp

SOT 01
29 Watt STRIP LED
WARM WHITE 3000K
3480 lm
IP 20
220 V Different voltage on request
CE Certification

SOT 02
58 Watt STRIP LED
WARM WHITE 3000K
6960 lm
IP 20
220 V Different voltage on request
CE Certification

Collezione / *Collection*

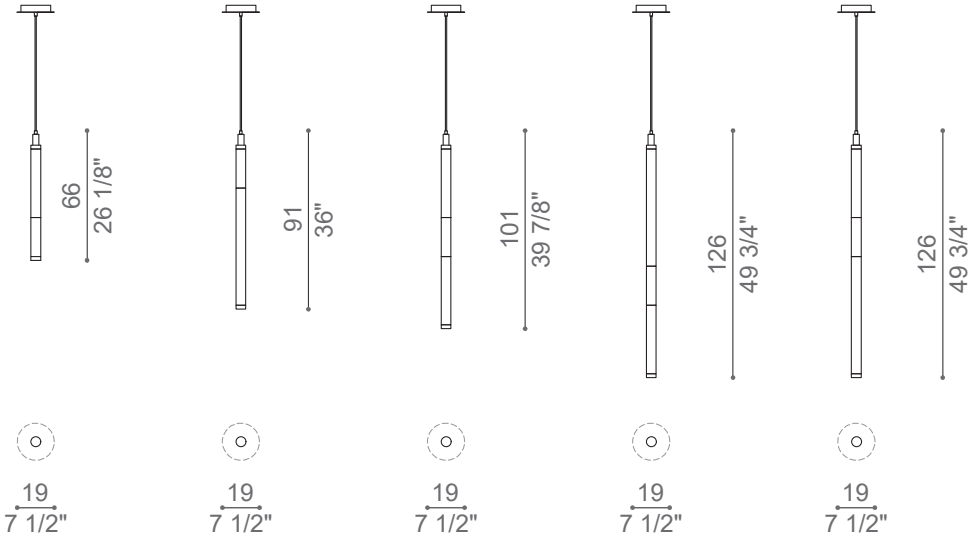

SO 01 **SO 02** **SO 03** **SO 04** **SO 05**

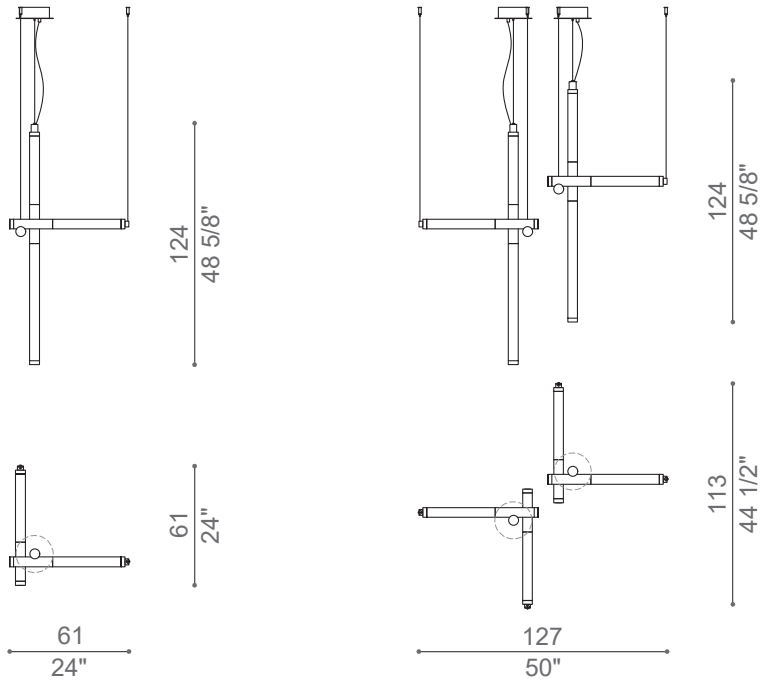

SOT 01 **SOT 02**

Finiture / *Finishes*

Struttura / *Structure*

Metallo champagne lucido
Champagne polished metal

Metallo champagne opaco
Champagne matt metal

Metallo cromo lucido
Chrome polished metal

Metallo nichel nero lucido
Polished black nickel metal

Diffusore / *Diffuser*

Vetrite opalescente retroilluminata
Vetrite opalescent backlit

Disponibile con tutte le finiture opalescenti della collezione Vetrite.
Available with all the opalescent finishes of the Vetrite collection.

VETRITE®
Go to the WebSite

KATANA wall sconce

WS 01
11 Watt STRIP LED 24 V
WARM WHITE 3000K
1320 lm
IP 20
220 V Different voltage on request
CE Certification

WS 02
6 Watt STRIP LED 24 V
WARM WHITE 3000K
720 lm
IP 20
220 V Different voltage on request
CE Certification

WS 03
17 Watt STRIP LED 24 V
WARM WHITE 3000K
2040 lm
IP 20
220 V Different voltage on request
CE Certification

WS 04
12 Watt STRIP LED 24 V
WARM WHITE 3000K
1440 lm
IP 20
220 V Different voltage on request
CE Certification

WS 05
22 Watt STRIP LED 24 V
WARM WHITE 3000K
2640 lm
IP 20
220 V Different voltage on request
CE Certification

KATANA floor lamp

FL 01
17 Watt STRIP LED
WARM WHITE 3000K
2040 lm
IP 20
220 V Different voltage on request
CE Certification

FL 02
15 Watt STRIP LED
WARM WHITE 3000K
2000 lm
IP 20
220 V Different voltage on request
CE Certification

FL 03
34 Watt STRIP LED
WARM WHITE 3000K
4080 lm
IP 20
220 V Different voltage on request
CE Certification

Collezione / *Collection*

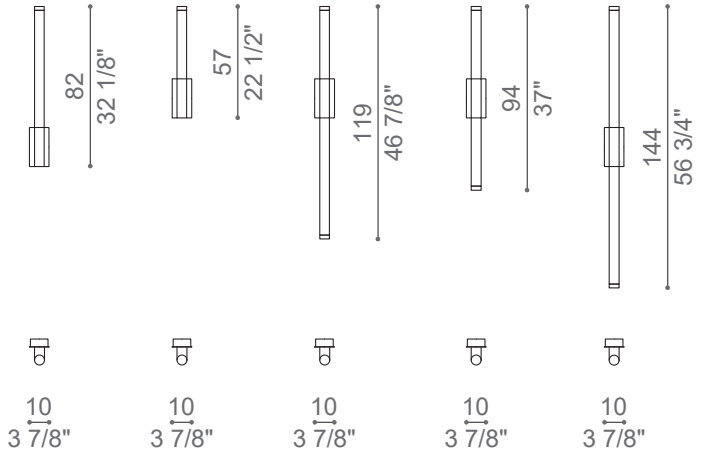

WS 01 **WS 02** **WS 03** **WS 04** **WS 05**

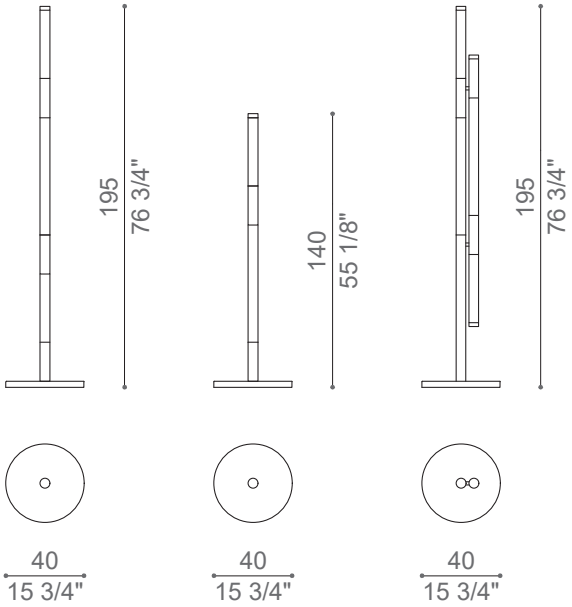

FL 01 **FL 02** **FL 03**

Finiture / *Finishes*

Struttura / *Structure*

Metallo champagne lucido
Champagne polished metal

Metallo champagne opaco
Champagne matt metal

Metallo cromo lucido
Chrome polished metal

Metallo nichel nero lucido
Polished black nickel metal

Diffusore / *Diffuser*

Vetrite opalescente retroilluminata
Vetrite opalescent backlit

Disponibile con tutte le finiture opalescenti della collezione Vetrite.
Available with all the opalescent finishes of the Vetrite collection.

VETRITE®
Go to the WebSite

Design by Massimiliano Raggi

GIUNCO

Lampade composte da un diffusore in vetro soffiato trasparente e colorato, intervallato da elementi in metallo con finiture preziose. La composizione di questi elementi genera una lampada dall'aspetto impalpabile che emette una luce soffusa ed elegante.

Lamps composed of a diffuser in transparent and colored blown glass, interspersed with metal elements with precious finishes. The combination of these elements creates a lamp with an ethereal appearance that emits a soft and elegant light.

GIUNCO ceiling lamp CL 01 amethyst
GIUNCO ceiling lamp CL 02 transparent
GIUNCO ceiling lamp CL 01, 02, 03 sea blue & transparent

SICIS

GIUNCO ceiling lamp CL 01, 02, 03
sea blue & transparent

SICIS

GIUNCO ceiling lamp CL 01, 02, 03 amethyst

GIUNCO ceiling lamps

CL 01
10 Watt STRIP LED, 24V,
WARM WHITE 2700K
1150 lm
IP 20 - RA80
220 V Different voltage on request
CE Certification

CL 02, 03
12 Watt STRIP LED, 24V,
WARM WHITE 2700K
1440 lm
IP 20 - RA80
220 V Different voltage on request
CE Certification

Collezione / *Collection*

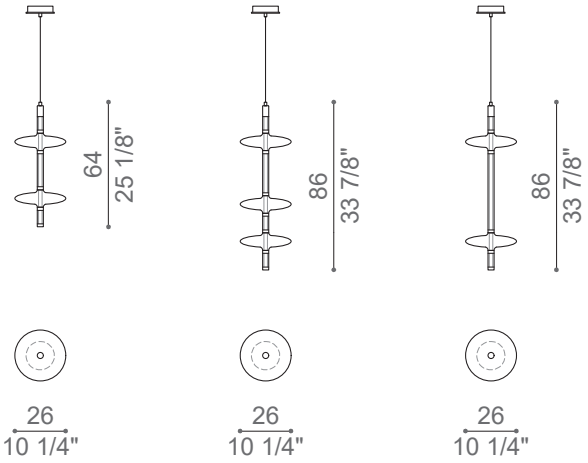

CL 01 **CL 02** **CL 03**

Finiture / *Finishes*

Struttura / *Structure*

Metallo champagne lucido
Polished champagne metal

Metallo cromo lucido
Polished chrome metal

Metallo nichel nero lucido
Polished black nickel metal

Diffusore / *Diffuser*

Vetro soffiato trasparente
Transparent blown glass

Vetro soffiato blu mare
Sea blue blown glass

Vetro soffiato ametista
Amethyst blown glass

Design by Massimiliano Raggi

BOHÈME

INDOOR / OUTDOOR

Tubi decorativi in vetro lavorato di Murano allineati su una struttura in metallo con finiture ricercate, caratterizzano questa serie di lampade. Gli elementi di cui sono composte permettono loro di essere estremamente versatili, per essere utilizzate in molteplici ambiti e progetti mantenendo funzionalità e raffinatezza.

Decorative tubes made of Murano glass, aligned on a metal structure with refined finishes, characterize this series of lamps. The elements they are composed of allow them to be extremely versatile, suitable for use in multiple contexts and projects while maintaining functionality and sophistication.

BOHÈME chandelier

SICIS

BOHÈME ceiling lamp CLUSTER OF 9

SICIS

BOHÈME chandelier
BOHÈME ceiling lamp CLUSTER OF 9

SICIS

BOHÈME ceiling lamp, chandelier · INDOOR / OUTDOOR

CLAMP 01
12 Watt STRIP LED, 24V,
WARM WHITE 2700K
1440 lm
IP 20 (IP 44 OUTDOOR version) - RA80
220 V Different voltage on request
CE Certification

CL 09
108 Watt STRIP LED, 24V,
WARM WHITE 2700K
12960 lm
IP 20 (IP 44 OUTDOOR version) - RA80
220 V Different voltage on request
CE Certification

CHL 90
90 Watt STRIP LED, 24V,
WARM WHITE 2700K
13470 lm
IP 20 (IP 44 OUTDOOR version) - RA80
220 V Different voltage on request
CE Certification

Collezione / *Collection*

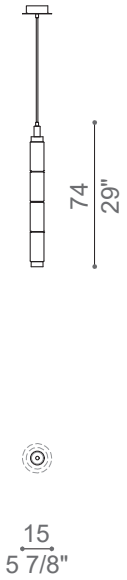

Ceiling lamp
CLAMP 01

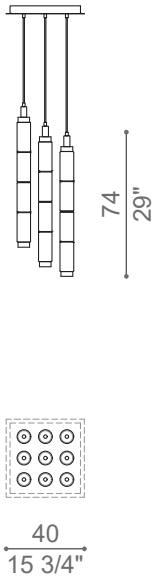

Ceiling lamp
CL 09

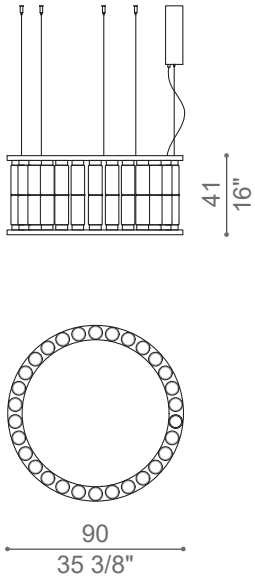

Chandelier
CHL 90

Finiture / *Finishes*

Struttura / *Structure*

Metallo champagne opaco
Matt champagne metal

Metallo champagne lucido
Polished champagne metal

Metallo champagne opaco per versione outdoor, versione indoor lucido.
Matt champagne metal for outdoor version, polished indoor version.

Diffusore / *Diffuser*

Vetro Murano trasparente
Transparent Murano glass

Design by Massimiliano Raggi

POLO

La struttura in metallo con finitura champagne, cromo e nichel, sviluppandosi su più assi, crea un suggestivo gioco prospettico. I diffusori sono composti da dischi in metacrilato pieni e vuoti con un sistema integrato di retroilluminazione led a luce calda.

The metal structure with champagne, chrome, and nickel finishes, developing along multiple axes, creates a captivating play of perspectives.
The diffusers are composed of solid and hollow methacrylate discs with an integrated warm led backlighting system.

GYMNASIUM

POLO ceiling lamp
SICIS

POLO wall sconce

SICIS

POLO ceiling lamp
POLO floor lamp

POLO ceiling lamp
POLO floor lamp

SICIS

POLO ceiling lamp

CLAMP
36 Watt STRIP LED, 24V,
WARM WHITE 2700K
3612 lm
IP 20 - RA80
220 V Different voltage on request
CE Certification

POLO wall sconce

WS
24 Watt STRIP LED, 24V,
WARM WHITE 2700K
2400 lm
IP 20 - RA80
220 V Different voltage on request
CE Certification

POLO floor lamp

FLAMP
36 Watt STRIP LED, 24V,
WARM WHITE 2700K
3612 lm
IP 20 - RA80
220 V Different voltage on request
CE Certification

Collezione / *Collection*

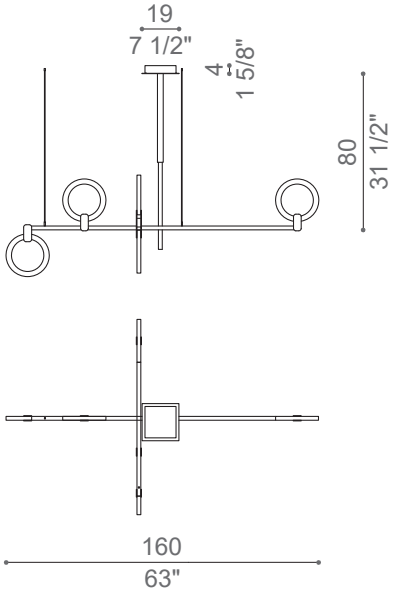

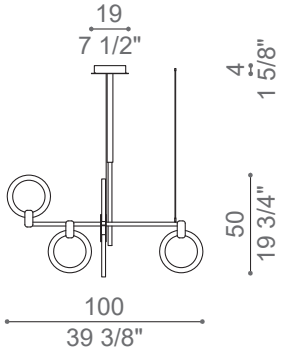

Ceiling lamp

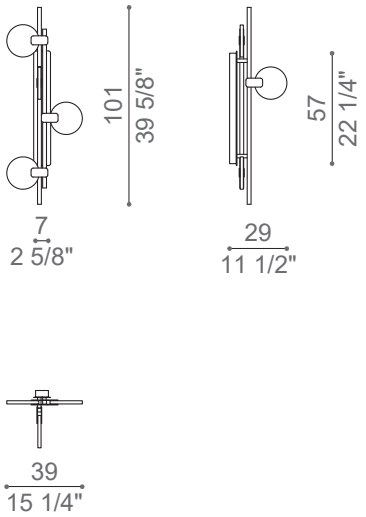

Wall sconce

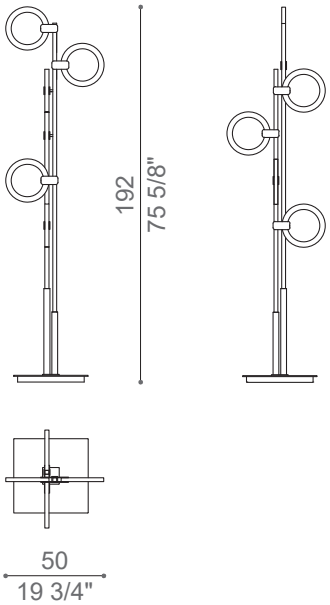

Floor lamp

Finiture / *Finishes*

Struttura / *Structure*

Metallo champagne lucido
Polished champagne metal

Metallo cromo lucido
Polished chrome metal

Metallo nichel nero lucido
Polished black nickel metal

Diffusore / *Diffuser*

Metacrilato trasparente
Transparent methacrylate

Design by Massimiliano Raggi

AMARETTO

Set di lampade della collezione SICIS Amaretto. Oggetti di design dal retrogusto vintage, adatti a qualsiasi ambiente, dal living alla camera da letto, con struttura in metallo e vetro soffiato.

Set of lamps from the SICIS Amaretto collection. Design objects with a vintage aftertaste, suitable for any environment, from the living room to the bedroom, with a metal frame and blown glass.

AMARETTO ceiling lamp

SICIS

AMARETTO floor lamp

AMARETTO wall sconce

SICIS

AMARETTO ceiling lamp

CL
23,2 Watt STRIP LED, 24V,
WARM WHITE 2700K
3452 lm
IP 20 - RA80
220 V Different voltage on request
CE Certification

AMARETTO wall sconce

WS
7,7 Watt STRIP LED, 24V,
WARM WHITE 2700K
1258 lm
IP 20 - RA80
220 V Different voltage on request
CE Certification

AMARETTO floor lamp

FL
23,2 Watt STRIP LED, 24V,
WARM WHITE 2700K
3452 lm
IP 20 - RA80
220 V Different voltage on request
CE Certification

AMARETTO
Go to the Catalogue

Collezione / *Collection*

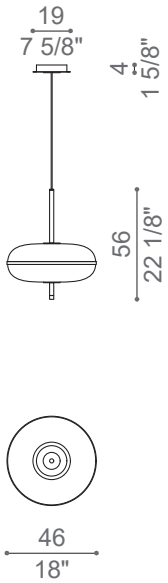

Ceiling lamp

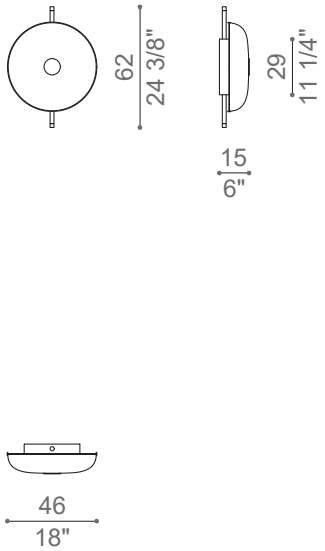

Wall sconce

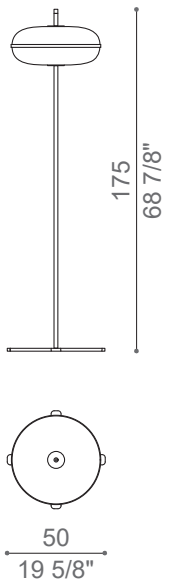

Floor lamp

Finiture / *Finishes*

Struttura / *Structure*

Metallo champagne lucido
Polished champagne metal

Metallo cromo lucido
Polished chrome metal

Metallo nichel nero lucido
Polished black nickel metal

Diffusore / *Diffuser*

Vetro soffiato finitura latte
Blown glass in white opal

Vetro soffiato in specchio bronzo
Brown glass in bronze mirror

Design by Massimiliano Raggi

DROP

INDOOR / OUTDOOR

Una lampada affascinante che trasforma i nostri spazi: bolle in vetro Murano, vellutate al tatto e finemente lavorate, emanano una luce soffusa e avvolgente, simile a un abbraccio che dissolve l'oscurità. La struttura è in metallo con finitura in metallo lucido champagne o cromo, o bianco opaco.

A captivating lamp that transforms our spaces: Murano glass bubbles, velvety to the touch and finely crafted, emit a soft and enveloping light, like an embrace that dissolves the darkness. The structure is made of metal with a polished champagne or chrome finish, or matt white.

DROP battery lamp CH BRO-TRA · **INDOOR / OUTDOOR**
DROP floor lamp CH BRO

DROP ceiling lamp CL 01
DROP ceiling lamp CL 02
DROP battery lamp CH AME-TRA · **INDOOR / OUTDOOR**

SICIS

CH ACMA B

CH BRO B

CH AME B

DROP ceiling lamp CL 01

CH FUM

CH TRASP

DROP ceiling lamp CL 01, 02
DROP wall sconce WS

SICIS

DROP table lamp CR ACMA-TRA
DROP battery lamp CH BRO-TRA · **INDOOR / OUTDOOR**

SICIS

DROP battery lamp B ACMA
INDOOR / OUTDOOR

DROP ceiling lamp

CL 01
4x4 Watt LED, 24V,
WARM WHITE 2700K
1760 lm
CRI 90 - IP 20
220 V Different voltage on request
CE Certification

CL 02
5x4 Watt LED, 24V,
WARM WHITE 2700K
2200 lm
CRI 90 - IP 20
220 V Different voltage on request
CE Certification

Collezione / *Collection*

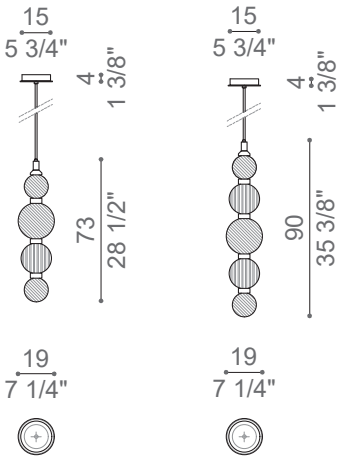

CL 01 **CL 02**

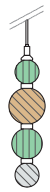

CL 01
CL/CH ACMA A

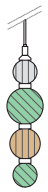

CL 01
CL/CH ACMA B

CL 02
CL/CH ACMA A

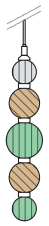

CL 02
CL/CH ACMA B

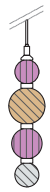

CL 01
CL/CH AME A

CL 01
CL/CH AME B

CL 02
CL/CH AME A

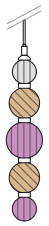

CL 02
CL/CH AME B

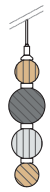

CL 01
CL/CH BRO A

CL 01
CL/CH BRO B

CL 02
CL/CH BRO A

CL 02
CL/CH BRO B

CL 01
CL/CH FUM A

CL 01
CL/CH FUM B

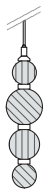

CL 02
CL/CH TRA A

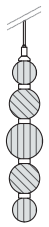

CL 02
CL/CH TRA B

Finiture / *Finishes*

Struttura / *Structure*

Metallo champagne lucido
Polished champagne metal

Metallo cromo lucido
Polished chrome metal

Diffusore / *Diffuser*

Acquamarina
Aquamarine

Ametista
Amethyst

Bronzo
Bronze

Fumè
Smoky

Trasparente
Transparent

Rigadin

Torchon

DROP wall sconce

WS
4x4 Watt LED, 24V,
WARM WHITE 2700K
1760 lm
IP 20
220 V Different voltage on request
CE Certification

DROP table lamp

TL
4x4 Watt LED, 24V,
WARM WHITE 2700K
1760 lm
IP 20
220 V Different voltage on request
CE Certification

Collezione / *Collection*

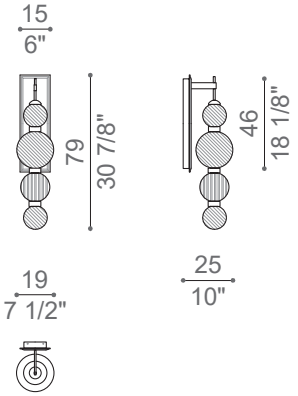

WS

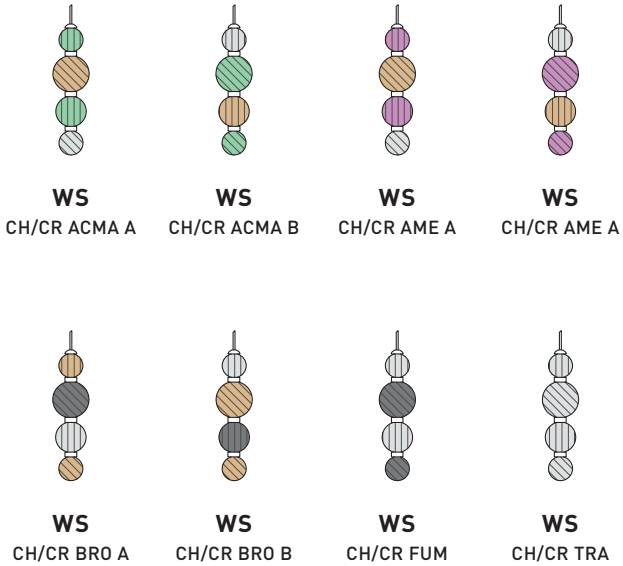

WS CH/CR ACMA A
WS CH/CR ACMA B
WS CH/CR AME A
WS CH/CR AME A
WS CH/CR BRO A
WS CH/CR BRO B
WS CH/CR FUM
WS CH/CR TRA

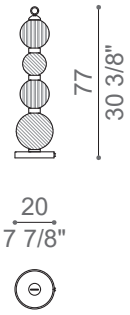

TL

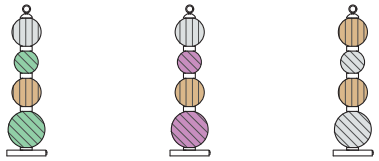

TL CH/CR ACMA
TL CH/CR AME
TL CH/CR FUM

Finiture / *Finishes*

Struttura / *Structure*

Metallo champagne lucido
Polished champagne metal

Metallo cromo lucido
Polished chrome metal

Diffusore / *Diffuser*

Acquamarina
Aquamarine

Ametista
Amethyst

Bronzo
Bronze

Fumè
Smoky

Trasparente
Transparent

Rigadin

Torchon

DROP floor lamp

FL 01
4x4 Watt LED, 24V,
WARM WHITE 2700K
1760 lm
CRI 90 - IP 20
220 V Different voltage on request
CE Certification

DROP battery lamp · INDOOR / OUTDOOR

TBL 01
5 Watt LED, 24V,
WARM WHITE 3000K
500 lm
IP 44
Battery autonomy 5 hours

Drop BATTERY LAMP
Go to the Catalogue

Collezione / *Collection*

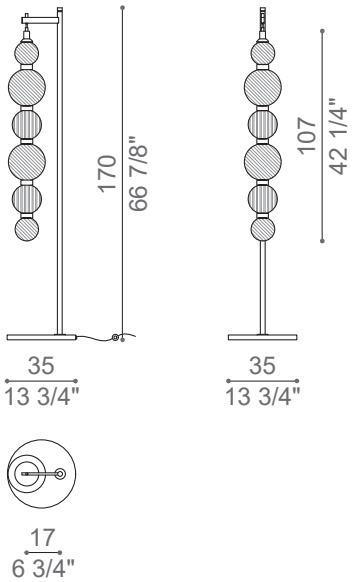

FL 01

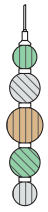

FL 01
CL/CH ACMA A

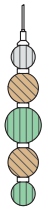

FL 01
CL/CH ACMA B

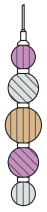

FL 01
CL/CH AME A

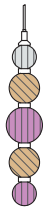

FL 01
CL/CH AME B

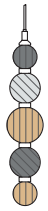

FL 01
CL/CH BRO A

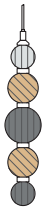

FL 01
CL/CH BRO B

FL 01
CL/CH FUM

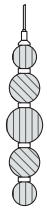

FL 01
CL/CH TRA

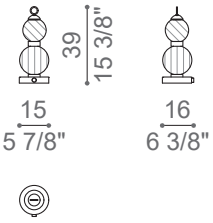

TBL 01

TBL 01
CH AME-TRA

TBL 01
CH BRO-AME

TBL 01
CH ACMA-TRA

TBL 01
CH BRO-ACMA

TBL 01
CH BRO-TRA

TBL 01
CR AME-TRA

TBL 01
CH FUM-AME

TBL 01
CH FUM-ACMA

TBL 01
CH ACMA-TRA

TBL 01
CH FUM-TRA

TBL 01
B ACMA

TBL 01
B AME

TBL 01
B BRO

TBL 01
B FUM

TBL 01
B TRA

Finiture / *Finishes*

Struttura / *Structure*

Metallo champagne lucido
Polished champagne metal

Metallo cromo lucido
Polished chrome metal

Metallo bianco opaco (solo per DROP battery)
Matt white metal (only for DROP battery)

Diffusore / *Diffuser*

Acquamarina
Aquamarine

Ametista
Amethyst

Bronzo
Bronze

Fumè
Smoky

Trasparente
Transparent

Rigadin

Torchon

Design by Massimiliano Raggi

GIACARTA

INDOOR / OUTDOOR

Un grande lampadario con un paralume in tessuto outdoor con tema botanico ed eleganti passamanerie. La geometria come una poliedro esagonale ne crea un oggetto prezioso capace di proiettare una luce soffice e piena.

A large chandelier with an outdoor fabric lampshade featuring a botanical theme and elegant trimmings. Its hexagonal polyhedron geometry creates a precious object capable of projecting a soft and full light.

GIACARTA ceiling lamp · **OUTDOOR**

SICIS

GIACARTA ceiling lamp · INDOOR / OUTDOOR

CLAMP
N°12 x 7 MAX 84W, E27 LED
WARM WHITE 2700K
IP 20 (IP 44 OUTDOOR version)
220 V Different voltage on request
CE Certification

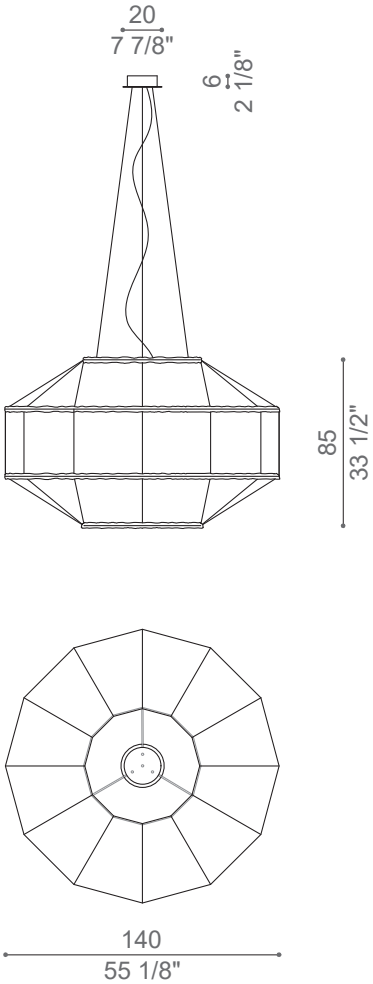

Ceiling lamp

Finiture / *Finishes*

Struttura / *Structure*

Metallo bianco opaco
Matt white metal

Diffusore / *Diffuser*

Tessuto outdoor BOTANICA green
BOTANICA green outdoor fabric

Design by Massimiliano Raggi

BALLET

Un collezione di lampade che si distingue per la sua versatilità e raffinatezza, unendo un gusto fresco e contemporaneo all'utilizzo di materiali pregiati e puri. Le forme geometriche speciali aggiungono un tocco distintivo e sofisticato a ogni lampada. Attraverso le molteplici declinazioni disponibili, è possibile combinare i vari modelli per creare un progetto di illuminazione unico e personalizzato, adatto a qualsiasi ambiente.

A collection of lamps that stands out for its versatility and refinement, combining a fresh and contemporary taste with the use of precious and pure materials. The special geometric shapes add a distinctive and sophisticated touch to each lamp. Through the multiple available variations, it is possible to combine the different models to create a unique and personalized lighting project, suitable for any environment.

BALLET ceiling lamp 1, 2, 3, 4, 5 bronze

BALLET ceiling lamp 5 chrome
BALLET ceiling lamp 3 chrome
BALLET ceiling lamp 2, 3, 4 bronze

SICIS

BALLET ceiling lamp 6 chrome
BALLET ceiling lamp 2, 3, 4, 5 chrome
BALLET ceiling lamp 2, 3, 4, 5 chrome · **custom mosaic**

BALLET ceiling lamp
chrome · **custom mosaic**

BALLET ceiling lamp 1, 2, 3, 4, 5
chrome · **custom mosaic**

SICIS

BALLET
ceiling lamp 6
chrome

BALLET
ceiling lamp 6
bronze

BALLET wall sconce chrome
BALLET wall sconce bronze

BALLET table lamp bronze
BALLET table lamp chrome

BALLET ceiling lamps

BALLET 1 - 2 x 4 Watt LED 880 lm
BALLET 2 - 2 x 4 Watt LED 880 lm
BALLET 3 - 1 x 4 Watt LED 440 lm
BALLET 4 - 1 x 4 Watt LED 440 lm
BALLET 5 - 2 x 3 Watt LED 400 lm
BALLET 6 - 2 x 3 Watt LED 1320 lm

WARM WHITE 2700K
220 V Different voltage on request
CE Certification
UL Certification

BALLET chandelier

CHAND 7 - 11 x 3 Watt LED 6600 lm
WARM WHITE 2700K
220 V Different voltage on request
CE Certification
UL Certification

BALLET wall sconce

WS - 2 x 4 Watt LED 880 lm
WARM WHITE 2700K
220 V Different voltage on request
CE Certification
UL Certification

BALLET table lamp

TLAMP -1 x E27 Max 60 Watt + 2 x 4 Watt LED, 2700K · 800 lm
220 V Different voltage on request
CE Certification
UL Certification

BALLET LAMP SERIES
Go to the WebSite

Collezione / *Collection*

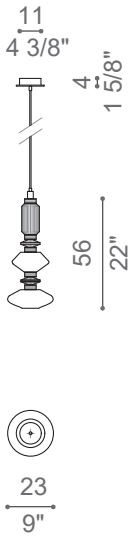

Ballet 1

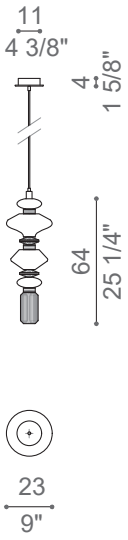

Ballet 2

Ballet 3

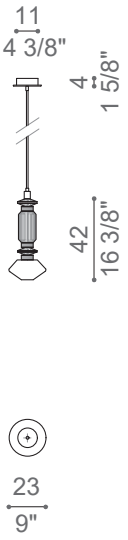

Ballet 4

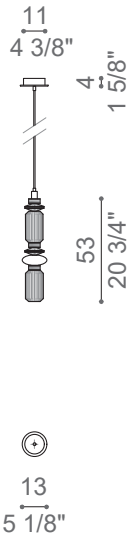

Ballet 5

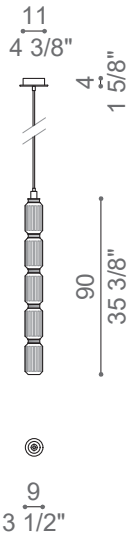

Ballet 6

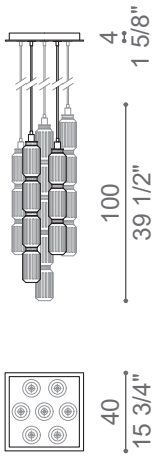

Chandelier *

*
Rosone per realizzare composizioni personalizzate abbinabile con:
Ceiling rosone to create customized compositions combinable with:

CEILING LAMP 1, 2, 3, 4, 5, 6

Dimensioni / *Dimensions*
40, 50, 60, 90, 120 cm
15 3/4", 19 3/4", 23 5/8", 35 3/8", 47 1/4"

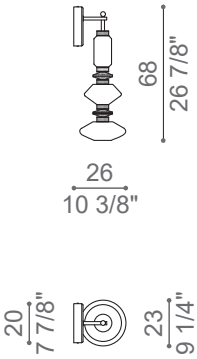

Wall sconce

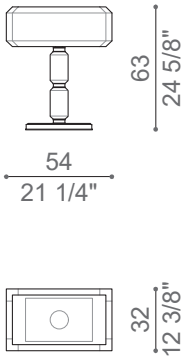

Table lamp

Finiture / *Finishes*

Struttura / *Structure*

Ottone brunito
Bronzed brass

Metallo cromo lucido
Polished chrome metal

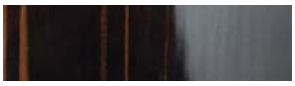

Ebano ammara lucido
Polished Ammara Ebony

Ebano ammara opaco
Matt Ammara Ebony

Diffusore / *Diffuser*

Vetro bronzo decorativo
Bronze decorative glass

Vetro ambra decorativo
Amber decorative glass

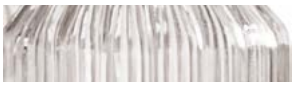

Vetro trasparente decorativo
Transparent decorative glass

Disponibili altri colori
Other colors available

Inserto in mosaico oro
Gold mosaic insert

Vetro cromo decorativo
Chrome decorative glass

Vetro fumè decorativo
Smoked decorative glass

Disponibili altri colori
Other colors available

Inserto in mosaico platino
Platinum mosaic insert

Design by Massimiliano Raggi

LESCOT

Lampade che ricordano il classicismo evocato dalla combinazione di materiali puri come il vetro, il metallo e i tessuti. Una linea elegante e armoniosa, reinterpretata in chiave moderna.

Lamps that evoke classicism through the combination of pure materials such as glass, metal, and fabrics. An elegant and harmonious line, reinterpreted in a modern style.

LESCOT
table lamp CT

LESCOT
table lamp BT2

SICIS

LESCOT floor lamp BP
LESCOT floor lamp CP

SICIS

LESCOT table lamp 1

CT / BT
no.1 · Max 60 Watt E27 incl.
220 V Different voltage on request
CE Certification

LESCOT table lamp 2

CT 2 / BT 2
no.1 · Max 60 Watt E27 incl.
220 V Different voltage on request
CE Certification

LESCOT floor lamp

CP / BP
no.1 · Max 60 Watt E27 incl.
220 V Different voltage on request
CE Certification

Collezione / *Collection*

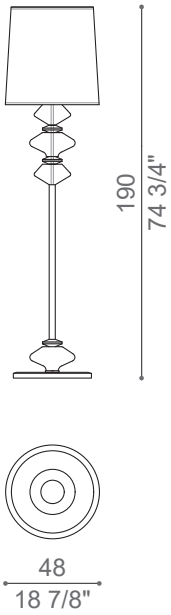

Floor lamp

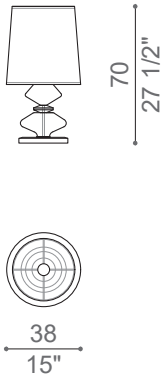

Table lamp 1

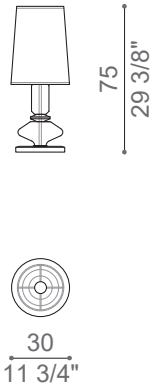

Table lamp 2

Finiture / *Finishes*

Struttura / *Structure*

Ottone brunito
Bronzed brass

Metallo cromo lucido
Polished chrome metal

Specchio bronzo
Bronze mirror

Specchio naturale
Natural mirror

Diffusore / *Diffuser*

Vetro bronzo decorativo
Bronze decorative glass

Vetro ambra decorativo
Amber decorative glass

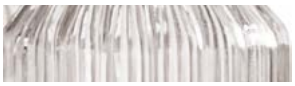

Vetro trasparente decorativo
Transparent decorative glass

Vetro cromo decorativo
Chrome decorative glass

Vetro fumè decorativo
Smoked decorative glass

Design by Massimiliano Raggi

GEMMA

Un serie di lampade concepite come sculture luminose dall'anima sensuale e intima. Le forme perfette ricordano le immagini di pianeti inesplorati, una forza enigmatica e attraente. La luce attraverso il diffusore in Vetrite crea affascinanti vibrazioni e sfumature di colore.

A series of lamps conceived as luminous sculptures with a sensual and intimate essence. Their perfect shapes evoke images of unexplored planets, with an enigmatic and alluring force. The light through the Vetrite diffuser creates captivating vibrations and color nuances.

GEMMA round ceiling lamp 90
GEMMA ring ceiling lamp 120
GEMMA ring ceiling lamp 90

GEMMA wall sconce 01, 02, 03, 04
GEMMA table lamp 02

GEMMA floor lamp HIGH
GEMMA floor lamp LOW

PATINIR
ANTONIO BERNARDI

GEMMA round ceiling lamp
GEMMA ring ceiling lamp

SICIS

GEMMA ring / round ceiling lamps

Ring 90
112 Watt STRIP LED, 24V,
WARM WHITE 3000K
13194 lm
IP 20 - RA80
220 V Different voltage on request
CE Certification

Ring 120
153 Watt STRIP LED, 24V,
WARM WHITE 3000K
18180 lm
IP 20 - RA80
220 V Different voltage on request
CE Certification

Round 60
58 Watt STRIP LED, 24V,
WARM WHITE 3000K
6660 lm
IP 20 - RA80
220 V Different voltage on request
CE Certification

Round 90
127 Watt STRIP LED, 24V,
WARM WHITE 3000K
15084 lm
IP 20 - RA80
220 V Different voltage on request
CE Certification

Round 120
195 Watt STRIP LED, 24V,
WARM WHITE 3000K
22896 lm
IP 20 - RA80
220 V Different voltage on request
CE Certification

È possibile avere il driver da incasso.
It's possible have the recessed driver.

gemma
Go to the Catalogue

Collezione / *Collection*

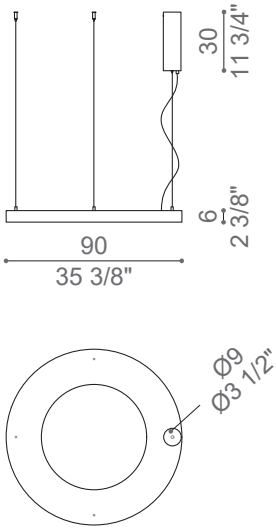

Ring 90

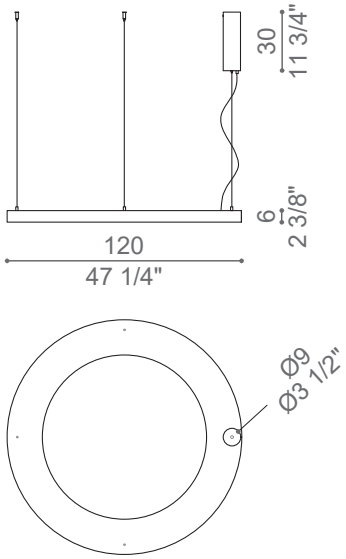

Ring 120

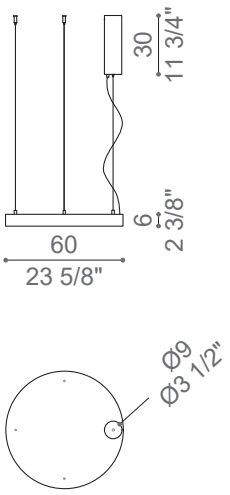

Round 60

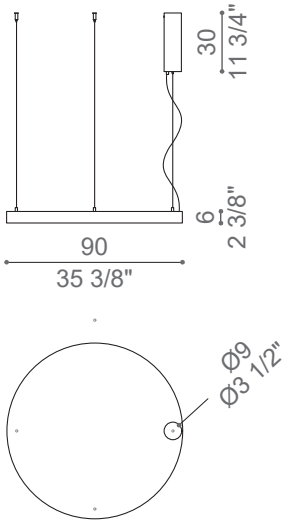

Round 90

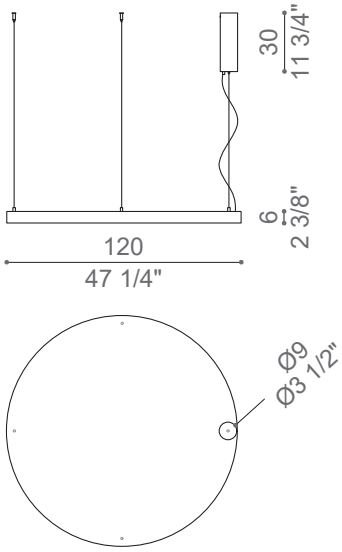

Round 120

Finiture / *Finishes*

Struttura / *Structure*

Metallo champagne opaco
Matt champagne metal

Metallo argento opaco
Matt silver metal

Metallo nichel opaco
Matt nickel metal

Diffusore / *Diffuser*

Vetrite opalescente retroilluminata
Vetrite opalescent backlit

Disponibile con tutte le finiture opalescenti della collezione Vetrite.
Available with all the opalescent finishes of the Vetrite collection.

VETRITE®
Go to the WebSite

GEMMA ceiling lamps

CLAMP 01
43 Watt STRIP LED
WARM WHITE 3000K
3780 lm
IP 20
220 V Different voltage on request
CE Certification

CLAMP 02
65 Watt STRIP LED
WARM WHITE 3000K
3150 lm
IP 20
220 V Different voltage on request
CE Certification

CLAMP 03
46 Watt STRIP LED
WARM WHITE 3000K
3400 lm
IP 20
220 V Different voltage on request
CE Certification

GEMMA wall sconces

WS 01-02
20 Watt STRIP LED
WARM WHITE 3000K
1310 lm
IP 20
220 V Different voltage on request
CE Certification

WS 03-04
20 Watt STRIP LED
WARM WHITE 3000K
1360 lm
IP 20
220 V Different voltage on request
CE Certification

Collezione / *Collection*

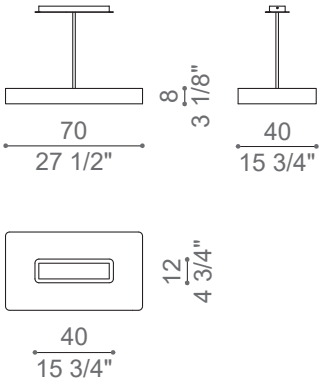

Ceiling lamp 01

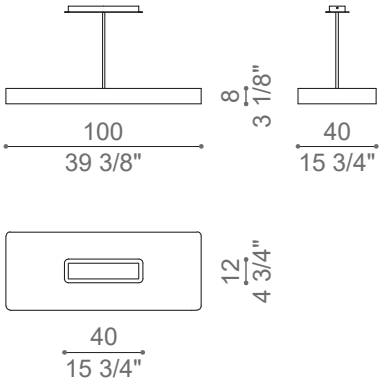

Ceiling lamp 02

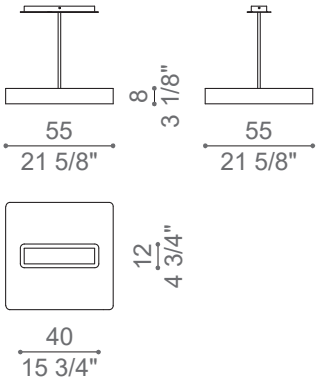

Ceiling lamp 03

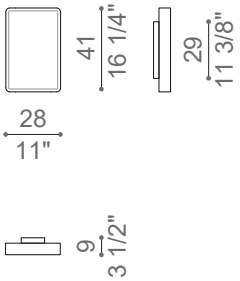

Wall sconce 01

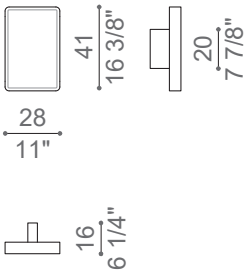

Wall sconce 02

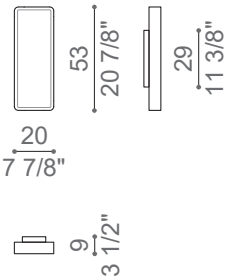

Wall sconce 03

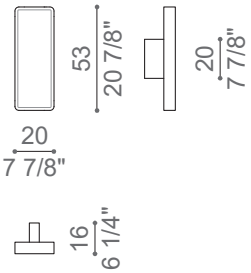

Wall sconce 04

Finiture / *Finishes*

Struttura / *Structure*

Metallo champagne opaco
Matt champagne metal

Metallo argento opaco
Matt silver metal

Metallo nichel opaco
Matt nickel metal

Diffusore / *Diffuser*

Vetrite opalescente retroilluminata
Vetrite opalescent backlit

Disponibile con tutte le finiture opalescenti della collezione Vetrite.
Available with all the opalescent finishes of the Vetrite collection.

VETRITE®
Go to the WebSite

GEMMA table lamps

TLAMP 01
22 Watt STRIP LED
WARM WHITE 3000K
1455 lm
IP 20
220 V Different voltage on request
CE Certification

TLAMP 02
21 Watt STRIP LED
WARM WHITE 3000K
1400 lm
IP 20
220 V Different voltage on request
CE Certification

GEMMA floor lamps

FLAMPL
40 Watt STRIP LED
WARM WHITE 3000K
2670 lm
IP 20
220 V Different voltage on request
CE Certification

FLAMPH
52 Watt STRIP LED
WARM WHITE 3000K
3450 lm
IP 20
220 V Different voltage on request
CE Certification

Collezione / *Collection*

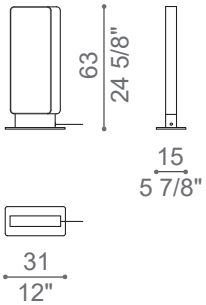

Table lamp 1

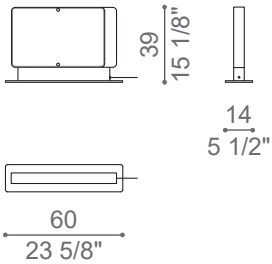

Table lamp 2

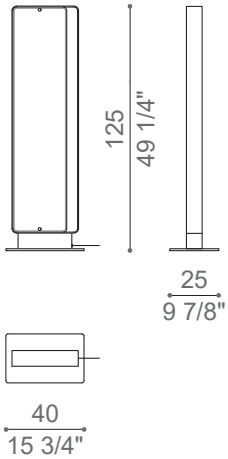

Floor lamp LOW

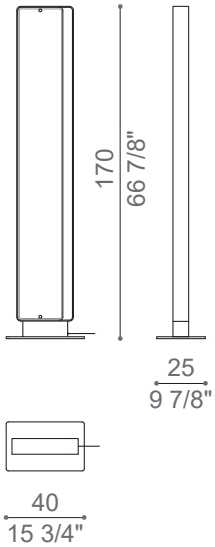

Floor lamp HIGH

Finiture / *Finishes*

Struttura / *Structure*

Metallo champagne opaco
Matt champagne metal

Metallo argento opaco
Matt silver metal

Metallo nichel opaco
Matt nickel metal

Diffusore / *Diffuser*

Vetrite opalescente retroilluminata
Vetrite opalescent backlit

Disponibile con tutte le finiture opalescenti della collezione Vetrite.
Available with all the opalescent finishes of the Vetrite collection.

VETRITE®
Go to the WebSite

Design by Massimiliano Raggi

TRIS

Un sistema di lampade versatili, caratterizzate da un ironico equilibrio geometrico fatto di giochi di forme, luci e materiali come il metallo della struttura e le sfere in vetro soffiato di Murano.

A system of versatile lamps characterized by an ironic geometric balance, featuring playful interactions of shapes, lights, and materials such as the metal structure and Murano blown glass spheres.

TRIS ceiling lamp
TRIS floor lamp

SICIS

TRIS floor lamp

SICIS

TRIS round chandelier

SICIS

TRIS wall sconce
TRIS table lamp

SICIS

TRIS ceiling lamp

CL
no.5 x Max 5 Watt G9 LED 2700K incl.
220 V · Different voltage on request
CE Certification

TRIS round chandelier

RC LAMP
no.16 x Max 5 Watt G9 LED 2700K incl.
no.8 x Max 1 Watt LED 2700K
220 V · Different voltage on request
CE Certification

TRIS wall sconce

WS
no.2 x Max 28 Watt G9 LED 2700K incl.
220 V · Different voltage on request
CE Certification

Collezione / *Collection*

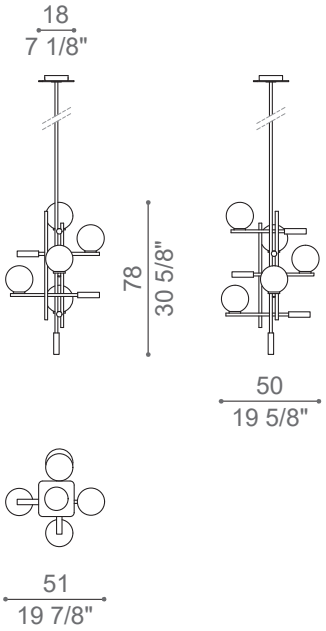

Ceiling lamp

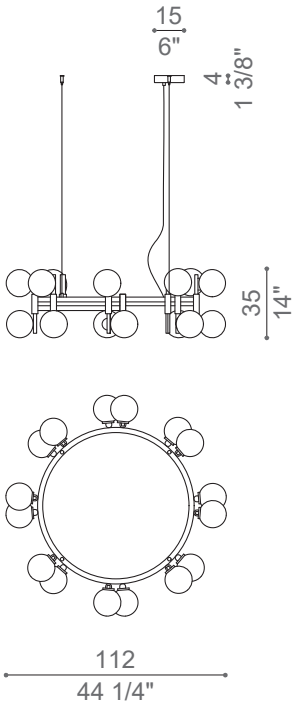

Round chandelier

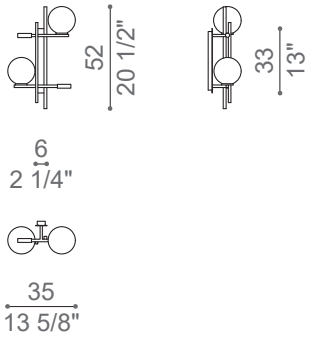

Wall sconce

Finiture / *Finishes*

Struttura / *Structure*

Metallo champagne opaco
Matt champagne metal

Metallo champagne lucido
Polished champagne metal

Diffusore / *Diffuser*

Rigadin

Torchon

TRIS table lamp

TLAMP
no.2 · Max 28 Watt G9 incl.
220 V · Different voltage on request
CE Certification

TRIS liseuse

LLAMP
no.3 · Max 28 Watt G9 incl.
220 V · Different voltage on request
CE Certification

TRIS floor lamp

FLAMP
no.4 · Max 28 Watt G9 incl.
220 V · Different voltage on request
CE Certification

Collezione / *Collection*

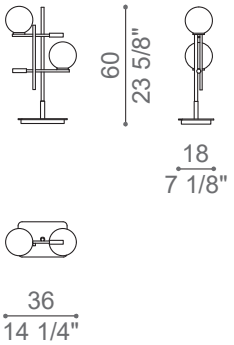

Table lamp

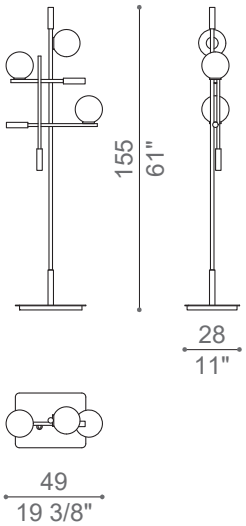

Liseuse

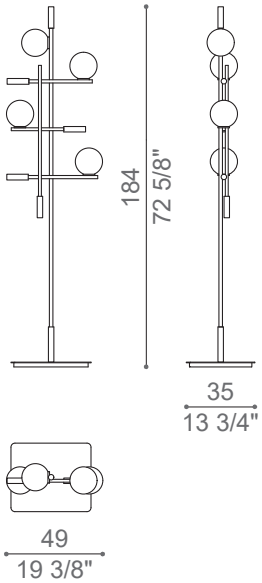

Floor lamp

Finiture / *Finishes*

Struttura / *Structure*

Metallo champagne opaco
Matt champagne metal

Metallo champagne lucido
Polished champagne metal

Diffusore / *Diffuser*

Rigadin

Torchon

Design by Massimiliano Raggi

OSCAR

Attraverso la sue forme esalta la bellezza dei vetri realizzati in differenti texture, utilizzati per schermare la sorgente luminosa. La trasparenza dei vetri massimizza l'emissione luminosa mentre le particolari texture creano un fascino senza tempo.

Through its forms, it enhances the beauty of glass with different textures, used to shield the light source. The transparency of the materials maximizes light emission, while the unique textures create a timeless charm.

OSCAR wall sconce

OSCAR ceiling lamp
OSCAR wall sconce

SICIS

OSCAR chandelier
OSCAR wall sconce

OSCAR table lamp

SICIS

SICIS

OSCAR ceiling lamp

CLAMP
44 Watt STRIP LED
WARM WHITE 2700K
5600 lm
IP 20
220 V · Different voltage on request
CE Certification

OSCAR chandelier

CHAND
134 Watt STRIP LED
WARM WHITE 2700K
17000 lm
IP 20
220 V · Different voltage on request
CE Certification

OSCAR wall sconce

WS
22 Watt STRIP LED
WARM WHITE 2700K
2860 lm
IP 20
220 V · Different voltage on request
CE Certification

Collezione / *Collection*

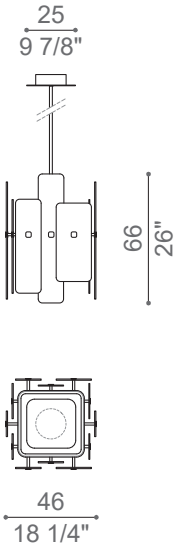

Ceiling lamp

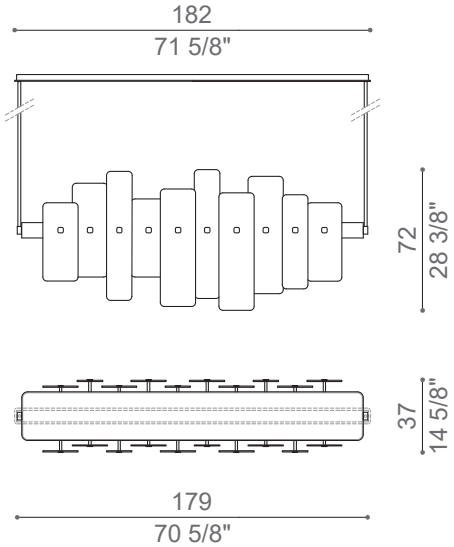

Chandelier

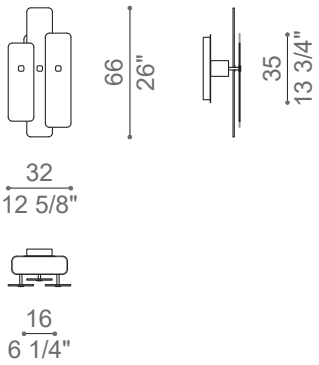

Wall sconce

Finiture / *Finishes*

Struttura / *Structure*

Metallo champagne opaco
Matt champagne metal

Diffusore / *Diffuser*

Vetro opalescente Iguana
Iguana opalescent glass

Vetro opalescente Elephant
Elephant opalescent glass

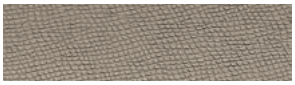

Vetro opalescente Lizard
Lizard opalescent glass

OSCAR table lamp

TLAMP
22 Watt STRIP LED
WARM WHITE 2700K
2860 lm
IP 20
220 V · Different voltage on request
CE Certification

OSCAR floor lamp

FLAMP
35 Watt STRIP LED
WARM WHITE 2700K
4500 lm
IP 20
220 V · Different voltage on request
CE Certification

Table lamp

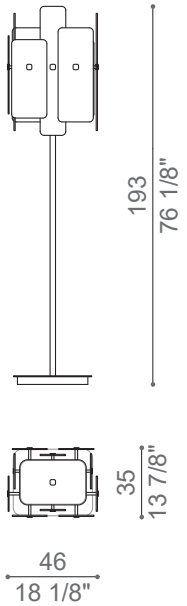

Floor lamp

Finiture / *Finishes*

Struttura / *Structure*

Metallo champagne opaco
Matt champagne metal

Diffusore / *Diffuser*

Vetro opalescente Iguana
Iguana opalescent glass

Vetro opalescente Elephant
Elephant opalescent glass

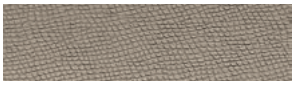

Vetro opalescente Lizard
Lizard opalescent glass

Design by Massimiliano Raggi

ODISSEY

Fasce sottili realizzate in metalli con speciali finiture ed elementi in legno danno vita a questo lampadario. Figure geometriche che si intersecano alle estremità della struttura con il sistema di illuminazione centrale.

Thin bands crafted from metals with special finishes and elements of wood bring this chandelier to life. Geometric figures intersect at the ends of the structure around the central lighting system.

ODISSEY ceiling lamp
ODISSEY wall sconce

SICIS

ODISSEY ceiling lamp

SICIS

ODISSEY wall sconce

SICIS

ODISSEY ceiling lamp

CLAMP
56 Watt STRIP LED
WARM WHITE 3000K
2900 lm
IP 20
220 V · Different voltage on request
CE Certification

ODISSEY wall sconce

WS
16 Watt STRIP LED
WARM WHITE 3000K
800 lm
IP 20
220 V · Different voltage on request
CE Certification

Collezione / *Collection*

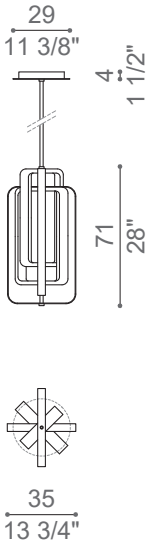

Ceiling lamp

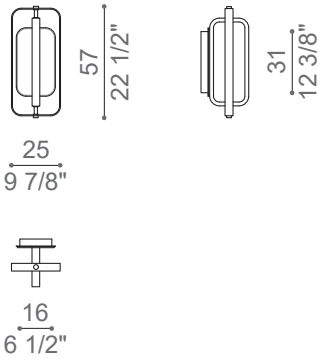

Wall sconce

Finiture / *Finishes*

Struttura / *Structure*

Ottone brunito
Bronzed brass

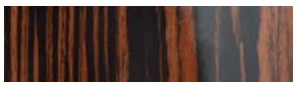

Ebano Macassar lucido/opaco
Polished/matt Macassar Ebony

Ebano Ammara lucido/opaco
Polished/matt Ammara Ebony

Diffusore / *Diffuser*

Vetro pirex decorativo
Decorative pirex glass

Design by Massimiliano Raggi

ANDROMEDA

La superficie lavorata dei dischi in vetro si unisce ai metalli pregiati. Corpi illuminanti raffinati, senza tempo, che grazie al gioco di sfumature in gradazione fumè e bronzo, appaiono estremamente trasversali e contemporanei.

The crafted surface of the glass discs blends with precious metals. They are refined, timeless light fixtures that, thanks to the interplay of shades in smoky and bronze gradients, appear extremely versatile and contemporary

ANDROMEDA ceiling lamp fumè

ANDROMEDA ceiling lamp bronze
ANDROMEDA wall sconce bronze

ANDROMEDA chandelier fumè
ANDROMEDA chandelier bronze

ANDROMEDA wall sconce fumè
ANDROMEDA wall sconce bronze

SICIS

ANDROMEDA ceiling lamp

CL
6 x 3 Watt LED + 1+1 Watt LED
WARM WHITE 3000K
2500 lm
IP 20
220 V · Different voltage on request
CE Certification
UL Certification

ANDROMEDA chandelier

CH
8 x 3 Watt LED + 4+1 Watt LED
WARM WHITE 3000K
3600 lm
IP 20
220 V · Different voltage on request
CE Certification
UL Certification

ANDROMEDA wall sconce

WS
1 x 3 Watt LED
WARM WHITE 3000K
400 lm
IP 20
220 V · Different voltage on request
CE Certification
UL Certification

Collezione / *Collection*

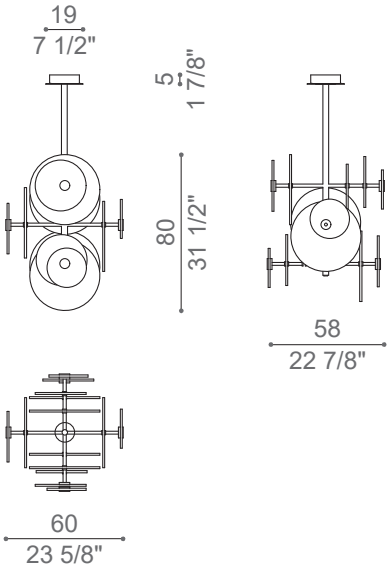

Ceiling lamp

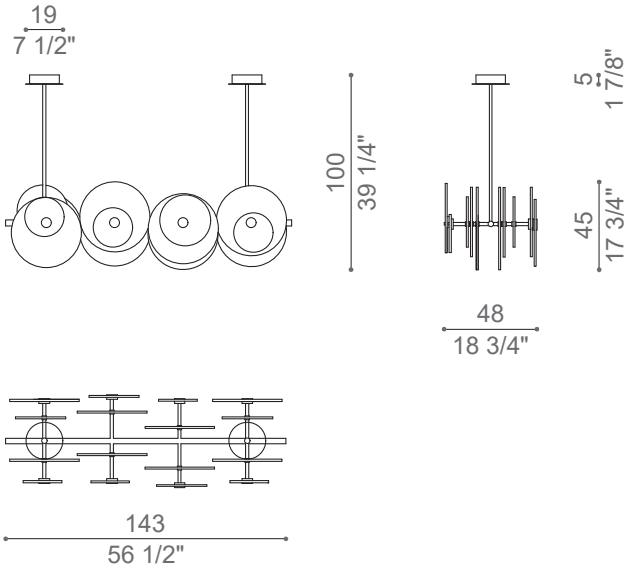

Chandelier

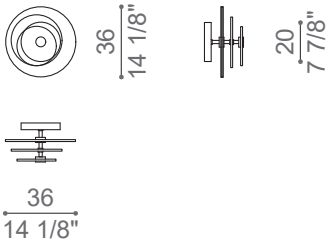

Wall sconce

Finiture / *Finishes*

Struttura / *Structure*

Ottone brunito
Bronzed brass

Champagne opaco
Matt champagne

Metallo lavorato ottone
Brass worked metal

Metallo lavorato champagne
Champagne worked metal

Diffusore / *Diffuser*

Vetro bronzo decorativo 01
Bronze decorative glass 01

Vetro bronzo decorativo 02
Bronze decorative glass 02

Vetro bronzo decorativo 03
Bronze decorative glass 03

Vetro fumè decorativo 01
Fumè decorative glass 01

Vetro fumè decorativo 02
Smoked decorative glass 02

Vetro fumè decorativo 03
Fumè decorative glass 03

Design by Massimiliano Raggi

FLUXUS

La collezione costituisce un omaggio al movimento e al concetto del fluire. Le forme e i volumi si fondono per incarnare un pensiero filosofico, dando vita a una linea esclusiva di grande impatto artistico.

The collection pays homage to movement and the concept of flow. Shapes and volumes merge to embody a philosophical idea, creating an exclusive line of significant artistic impact.

FLUXUS chandelier gold
FLUXUS floor lamp chrome

SICIS

FLUXUS chandelier chrome

SICIS

FLUXUS floor lamp chrome
FLUXUS wall sconce gold

SICIS

FLUXUS ceiling lamp

CLAMP
no. 5 x 3 Watt LED 2000 lm
WARM WHITE 3000K
220 V Different voltage on request
CE Certification

FLUXUS chandelier

CHAND
no. 8 x 3 Watt LED 3200 lm
WARM WHITE 3000K
220 V Different voltage on request
CE Certification

FLUXUS wall sconce

WS
no. 2 x 3 Watt LED 800 lm
WARM WHITE 3000K
220 V Different voltage on request
CE Certification

FLUXUS floor lamp

FLAMP
no. 4 x 3 Watt LED 2000 lm
WARM WHITE 3000K
220 V Different voltage on request
CE Certification

Collezione / *Collection*

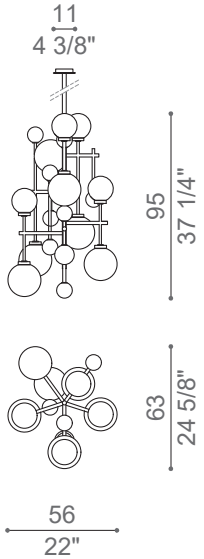

Ceiling lamp

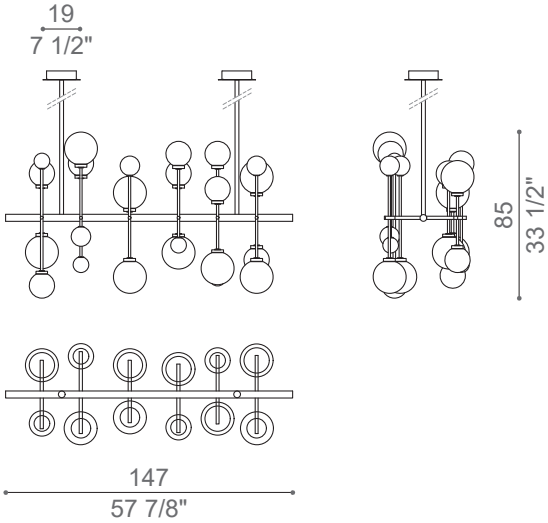

Chandelier

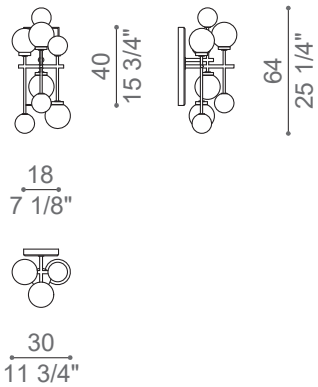

Wall sconce

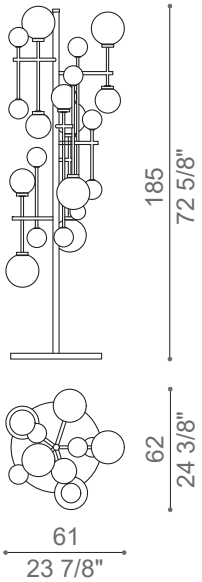

Floor lamp

Finiture / *Finishes*

Struttura / *Structure*

Bronzo antico
Antique bronze

Metallo argento satinato
Satin silver metal

Diffusore / *Diffuser*

Vetro bronzo decorativo
Bronze decorative glass

Vetro ambra decorativo
Amber decorative glass

Sfere decorative in mosaico oro
Gold decorative glass spheres

Vetro cromo decorativo
Chrome decorative glass

Vetro fumè decorativo
Smoked decorative glass

Sfere decorative in mosaico platino
Platinum decorative glass spheres

Design by Massimiliano Raggi

VENUS

La struttura è costituita dalla composizione di mezzelune in ottone e in Vetrite retroilluminata che diffonde nell'ambiente circostante una luce calda, d'atmosfera. Linee eleganti e versatili.

The structure is made up of a composition of half-moons in brass and backlit Vetrite that diffuses a warm, atmospheric light into the surrounding environment. Elegant and versatile lines.

VENUS floor lamp
VENUS ceiling lamp

SICIS

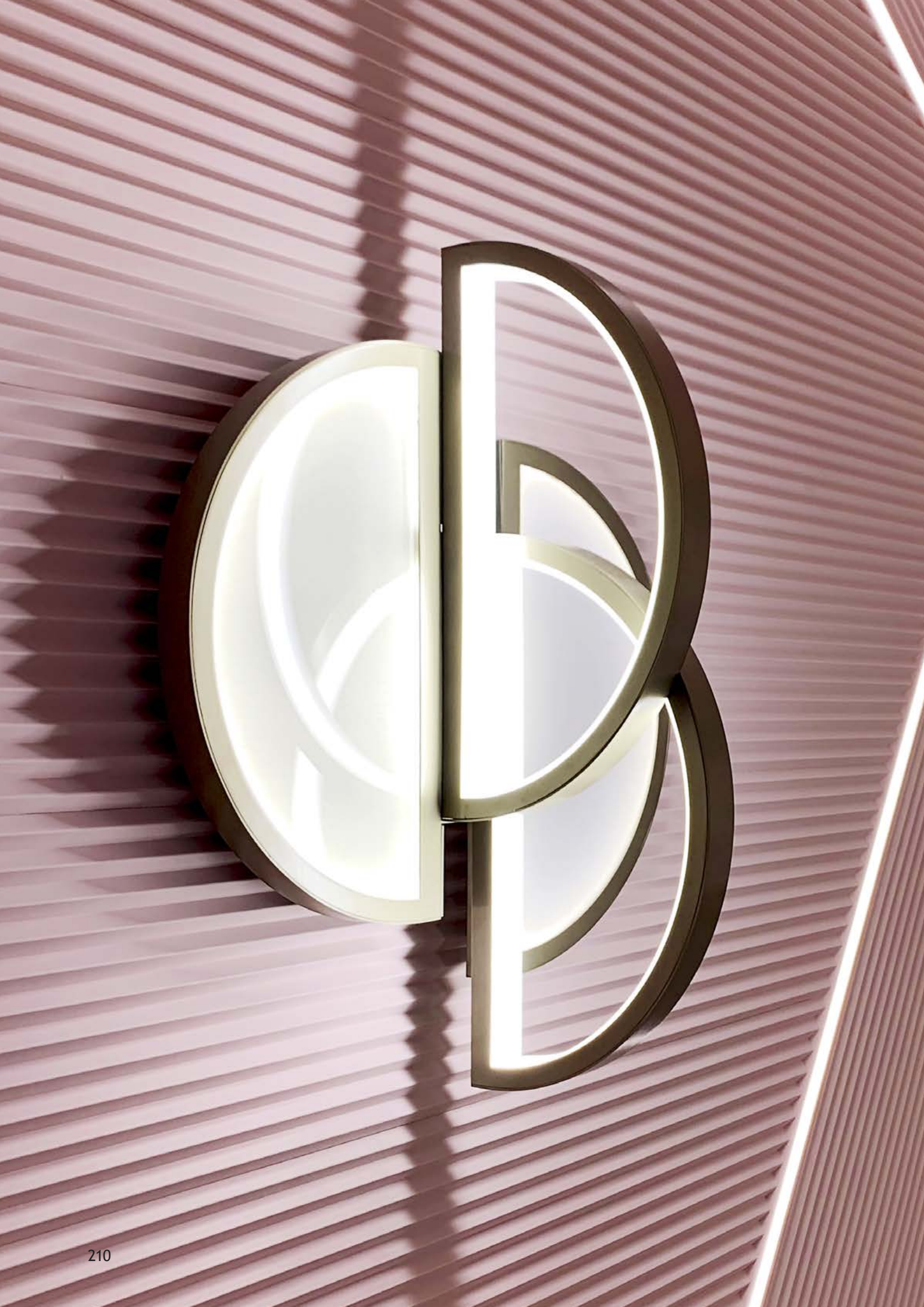

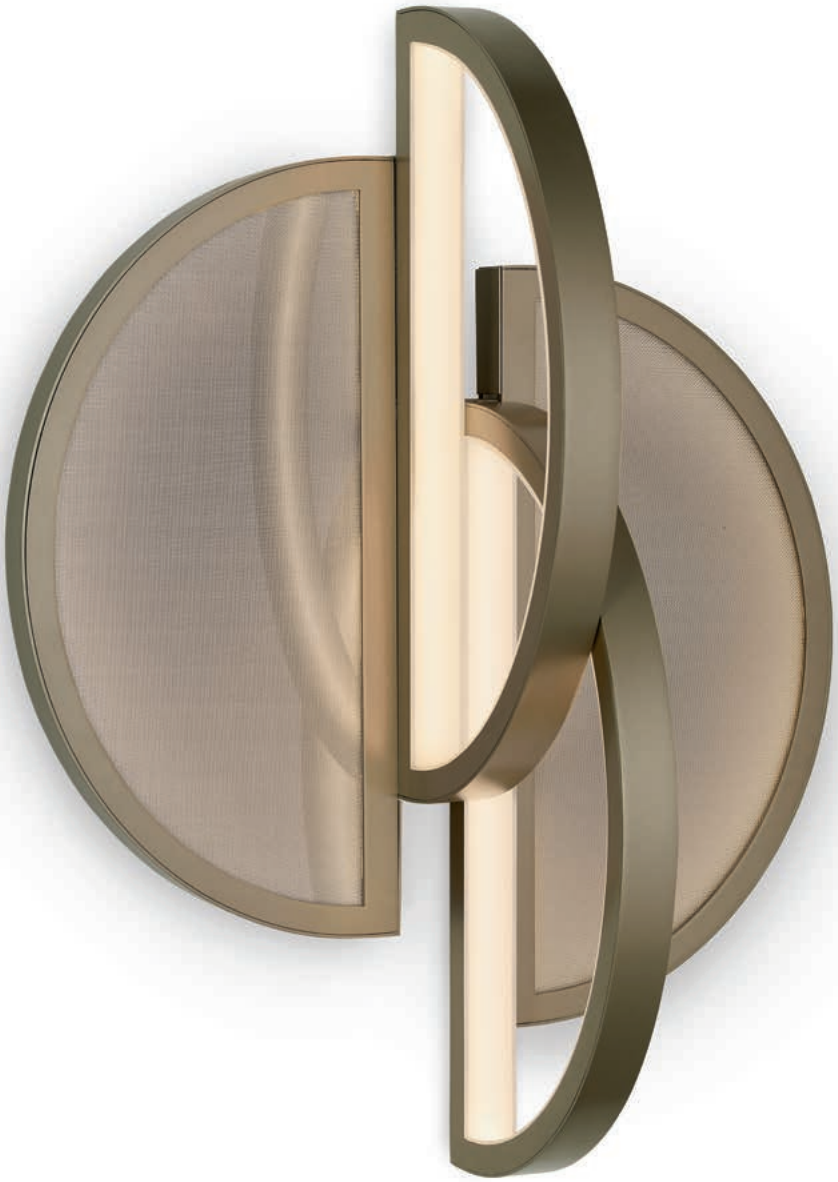

VENUS ceiling lamp

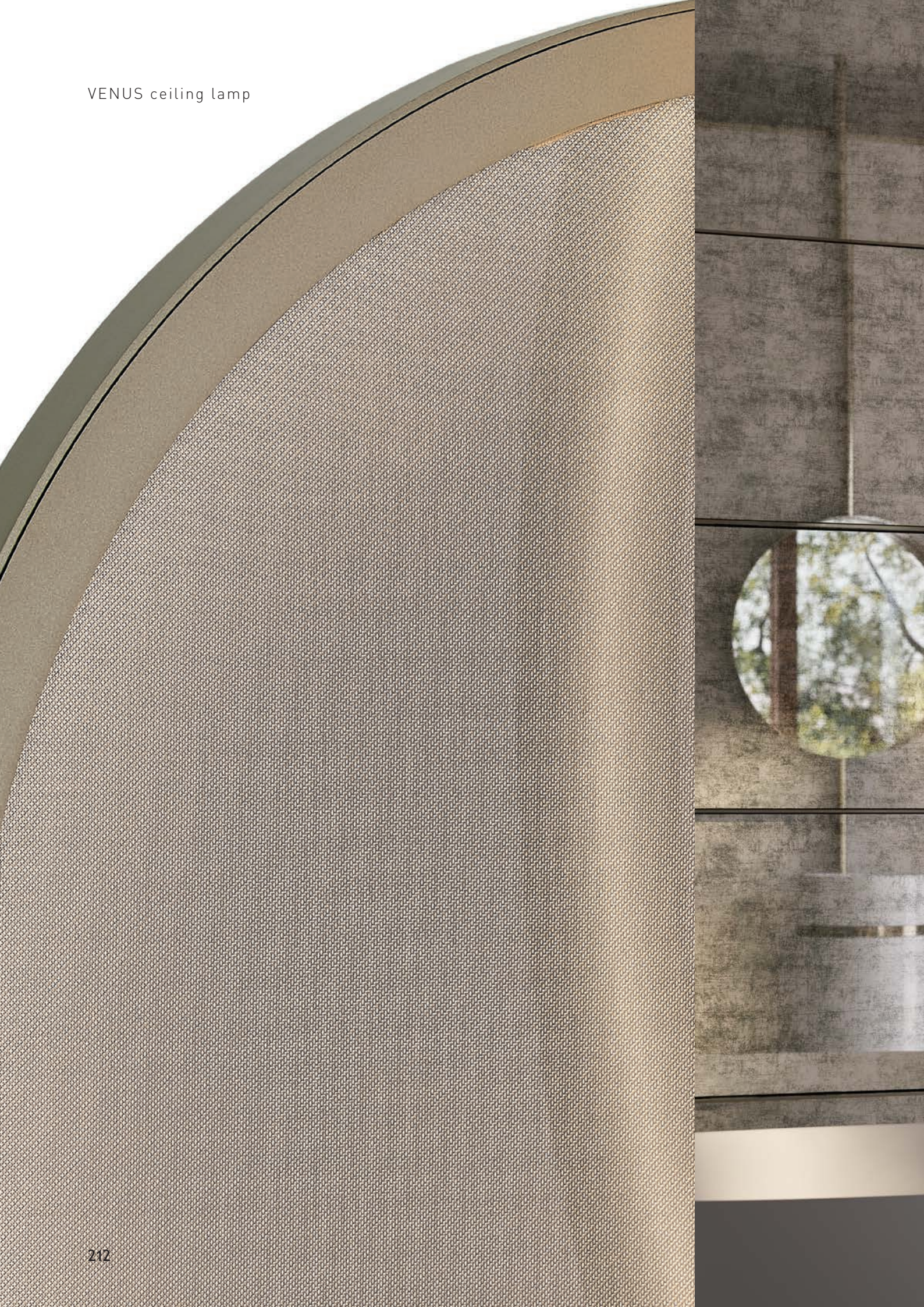

SICIS

VENUS ceiling lamp

CLAMP
80 Watt STRIP LED · 7845 LUMEN · 2700 K
+ N° 4x3W COB LED 12 Watt · 1388 LUMEN · 2700 K
IP 20
220 V Different voltage on request
CE Certification

VENUS wall sconce

WS
60 Watt STRIP LED · 6200 LUMEN · 2700 K
IP 20
220 V Different voltage on request
CE Certification

VENUS table lamp

TLAMP
60 Watt STRIP LED · 6200 LUMEN · 2700 K
IP 20
220 V Different voltage on request
CE Certification

VENUS floor lamp

FLAMP
80 Watt STRIP LED · 7845 LUMEN · 2700 K
IP 20
220 V Different voltage on request
CE Certification

Collezione / *Collection*

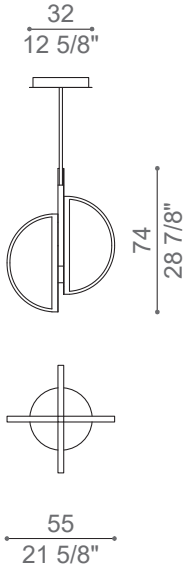

Ceiling lamp

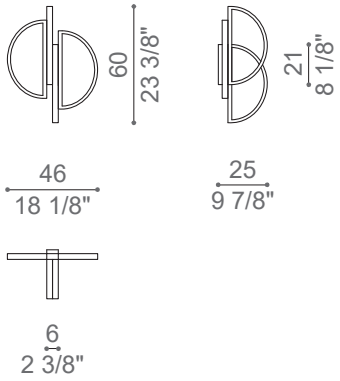

Wall sconce

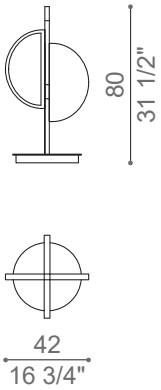

Table lamp

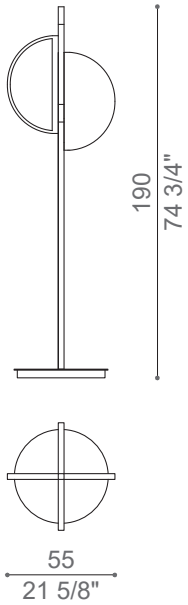

Floor lamp

Finiture / *Finishes*

Struttura / *Structure*

Champagne opaco
Matt champagne

Argento antico
Antique silver

Diffusore / *Diffuser*

Vetrite con rete metallica
Vetrite with metallic net

Design by Massimiliano Raggi

RIGEL

La sovrapposizione di sfere in vetro soffiato opalino e bronzo, appoggiate su una struttura in specchio bronzo, creano un oggetto che emette una luce soffusa ed elegante.

The overlay of opaline blown glass spheres and bronze, resting on a bronze mirror structure, creates an object that emits a soft and elegant light.

RIGEL table lamp

RIGEL table lamp

JACQUES HELLEU & CHANEL
JACQUES HELLEU & CHANEL

RIGEL table lamp

TLAMP
N.1 · Max 60 Watt E27 incl.
IP 20
220 V Different voltage on request
CE Certification

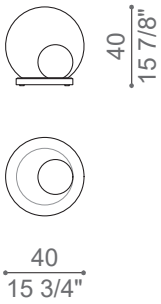

Table lamp

Finiture / *Finishes*

Struttura / *Structure*

Bronzo antico
Antique bronze

Specchio bronzo
Bronze mirror

Diffusore / *Diffuser*

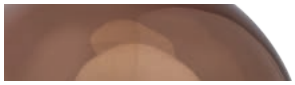

Sfera in vetro bronzo
Glass bronze sphere

Design by Massimiliano Raggi

TELLUS

Cromatismi contemporanei, linee regolari. Raffinata ed espressiva, evoca materiali ricercati come ebano, Vetrite e metalli pregiati. Una lampada che regala identità all'ambiente in cui è inserita.

Contemporary chromatics, clean lines. Refined and expressive, it evokes sought-after materials such as ebony, Vetrite, and precious metals. A lamp that imbues identity into the environment it inhabits.

CASE STUDY HOUSES
PICASSO
JOSEF HOFFMANN INTERIORS 1902-1913
The making of an Exhibition
ANDO
MASAO FURUYAMA
TASCHEN
JOSEF HOFFMANN
TULIPS
BY PETER ARNOLD
Design museum Gent
history and collection

TELLUS table lamp

SICIS

TELLUS table lamp

TLAMP
no.1 x Max 60 Watt E27 incl.
IP 20
220 V Different voltage on request
CE Certification

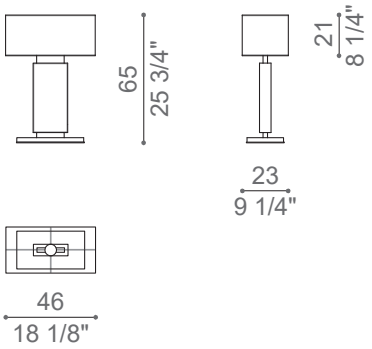

Table lamp

Finiture / *Finishes*

Struttura / *Structure*

Bronzo antico
Antique bronze

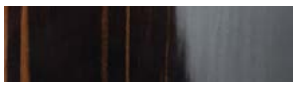

Ebano ammara lucido/opaco
Polished/matt Ammara Ebony

Vetrite Tela brown
Tela brown Vetrite

Disponibile con tutte le finiture della collezione Vetrite.
Available with all the finishes of the Vetrite collection.

Diffusore / *Diffuser*

Diffusore in tessuto
Fabric diffuser

VETRITE®
Go to the WebSite

Design by Massimiliano Raggi

DAN

Un lampadario con paralume realizzato in una combinazione di preziosi tessuti e inserti in metallo. Una scelta stilistica ricercata, riletta alla luce delle tendenze più moderne e valorizzata dalla scelta dei materiali.

A chandelier with a lampshade crafted from a combination of precious fabrics and metal inserts. A refined stylistic choice, reinterpreted in light of the latest trends and enhanced by the selection of materials.

SICIS

DAN ceiling lamp

CLAMP
no.4 x Max 60 Watt E27 incl.
220 V · Different voltage on request
CE Certification

Collezione / *Collection*

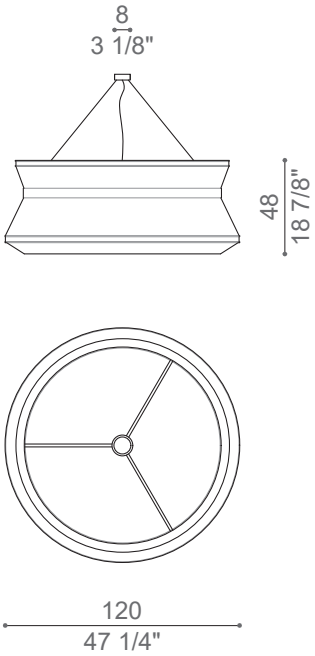

Ceiling lamp

Finiture / *Finishes*

Inserti in metallo / *Metal insert*

Champagne opaco
Matt champagne

Diffusore / *Diffuser*

Diffusore in tessuto
Fabric diffuser

Athena Bronze Tessere fabric
Tessere fabric Athena bronze

Ermes mud Tessere velvet
Tessere velvet Ermes mud

Disponibile su richiesta con altri tessuti della collezione Tessere.
Available on request, with other fabrics from the Tessere collection.

Design by Massimiliano Raggi

SIAM

Una pianta flessuosa come il bambù che si trasforma in uno scultoreo oggetto d'arte. Una serie di lampade capaci di creare un ambiente suggestivo dal fascino glam-chic.

A flexible plant like bamboo transforms into a sculptural work of art. A series of lamps that can create an evocative atmosphere with glam-chic allure.

SIAM ceiling lamp bronze
SIAM wall sconce ivory

SIAM chandelier bronze

SICIS

SIAM floor lamp bronze
SIAM floor lamp ivory

SICIS

SIAM table lamp ivory
SIAM table lamp bronze

SIAM ceiling lamp

CLAMP
no. 10 x 7,2 Watt GU10 LED WARM WHITE 3000K incl
5750 lm
IP 20
220 V Different voltage on request
CE Certification

SIAM chandelier

CHAND
no. 7 x 7,5 Watt GU10 LED WARM WHITE 3000K incl
4000 lm
IP 20
220 V Different voltage on request
CE Certification

SIAM wall sconce

WS
no. 4 x 1,5 Watt LED WARM WHITE 3000K incl
600 lm
IP 20
220 V Different voltage on request
CE Certification

SIAM table lamp

TLAMP
no. 8 x 1,5 Watt LED WARM WHITE 3000K incl
1200 lm
IP 20
220 V Different voltage on request
CE Certification

SIAM floor lamp

FLAMP
no. 10 x 1,5 Watt LED WARM WHITE 3000K incl
1500 lm
IP 20
220 V Different voltage on request
CE Certification

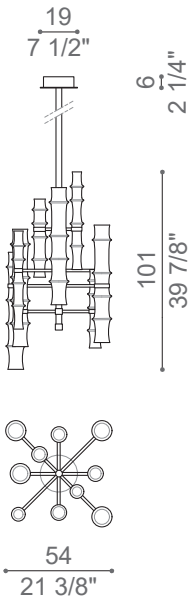

Ceiling lamp

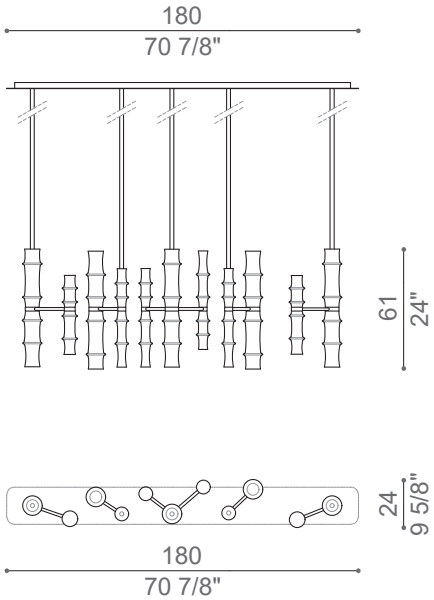

Chandelier

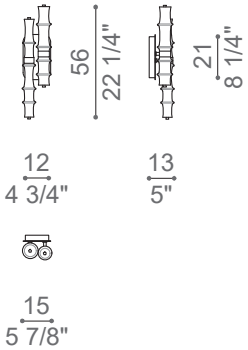

Wall sconce

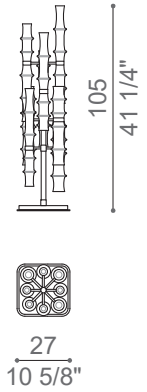

Table lamp

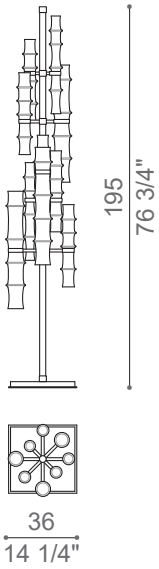

Floor lamp

Finiture / *Finishes*

Struttura / *Structure*

Bronzo antico
Antique bronze

Bronzo antico decorato a mano
Hand decorated antique bronze

Avorio lucido
Polished ivory

Design by Massimiliano Raggi

SELFIE

"L'occhio è il punto in cui si mescolano anima e corpo" (cit.)
Il pannello decorativo in mosaico artistico è un'opera esclusiva; uno sguardo che ci segue e cattura capace di creare un corpo illuminante originale e affascinante.

"The eye is the point where soul and body merge" (quote)
The decorative panel in artistic mosaic is an exclusive work; a gaze that follows and captures us, capable of creating an original and captivating lighting fixture.

SELFIE wall sconce William
SELFIE wall sconce Robert
SELFIE wall sconce Cindy

SICIS

SELFIE wall sconce David
SELFIE wall sconce Annie

SICIS

SELFIE wall sconce collection

WS
STRIP LED 28 Watt
1500 lm
IP 20
220 V Different voltage on request
CE Certification

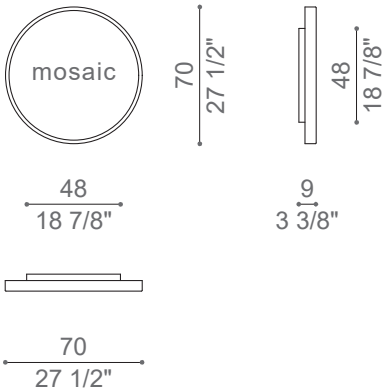

Wall sconce

Finiture / *Finishes*

Struttura / *Structure*

Bronzo antico
Antique bronze

Metallo cromo lucido
Chrome polished metal

Pannello decorativo in mosaico artistico / *Artistic mosaic decorative panel*

Annie

Robert

David

Cindy

William

Design by Massimiliano Raggi

VISCONTI

Materiali ricercati come l'ottone, l'alicrite e il mosaico artistico rendono questa serie di lampade dalle forme suadenti una fonte di luce avvolgente e piacevole. Un gioco di geometrie, pieni e vuoti in una elegante combinazione.

Precious materials such as brass, alicrite, and artistic mosaic make this series of lamps with their graceful forms a source of enveloping and pleasant light. A play of geometries, solids, and voids in an elegant combination.

VISCONTI floor lamp bronze
VISCONTI wall sconce silver

SICIS

VISCONTI table lamp bronze
VISCONTI floor lamp silver

SICIS

VISCONTI wall sconce bronze
VISCONTI table lamp silver

SICIS

VISCONTI sconce lamp

WS
no. 2 Strip LED max 22,5 Watt incl.
WARM WHITE 3000K
2473 lm
IP 20
220 V Different voltage on request
CE Certification

VISCONTI table lamp

TLAMP
no. 2 Strip LED max 18,5 Watt incl.
WARM WHITE 3000K
2035 lm
IP 20
220 V Different voltage on request
CE Certification

VISCONTI floor lamp

FLAMP
no. 4 Strip LED max 50 Watt incl.
WARM WHITE 3000K
5500 lm
IP 20
220 V Different voltage on request
CE Certification

Collezione / *Collection*

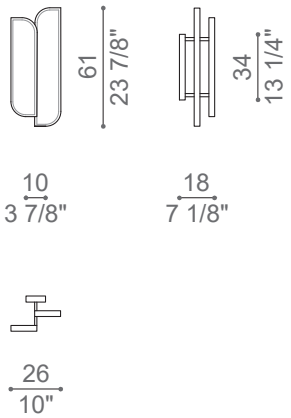

Wall sconce

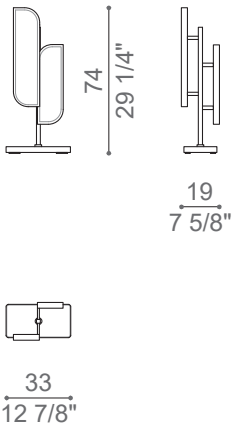

Table lamp

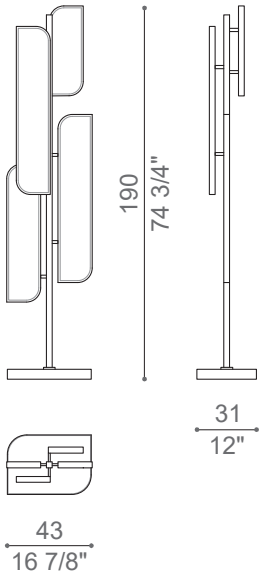

Floor lamp

Finiture / *Finishes*

Struttura / *Structure*

Bronzo antico
Antique bronze

Argento antico
Antique silver

Specchio bronzo
Bronze mirror

Specchio fumè
Smoke mirror

Inserto in mosaico artistico / *Artistic mosaic insert*

Mosaico artistico oro
Artistic gold mosaic

Mosaico artistico platino
Artistic platinum mosaic

Diffusore / *Diffuser*

Alicrite
Alicrite

Design by HBA

ELEMENT-K

Un lampadario dal design moderno, che comunica originalità e pensiero visionario. La luce è diffusa attraverso delle speciali bolle in ceramica con un interno di vetro simile a stalattiti di cristallo.

A modern chandelier that conveys originality and visionary thinking. Light is diffused through special ceramic bubbles with an interior glass resembling crystal stalactites.

ELEMENT-K ceiling lamp chrome
ELEMENT-K ceiling lamp gold

SICIS

ELEMENT-K ceiling lamp

CL
no. 5 x 1,2 Watt WARM WHITE 3000K incl
600 lm
IP 20
220 V Different voltage on request
CE Certification

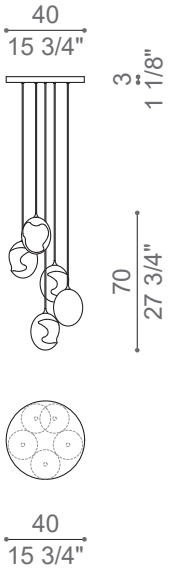

Ceiling lamp

Finiture / *Finishes*

Struttura / *Structure*

Ceramica oro
Gold ceramic

Ceramica cromo
Chrome ceramic

Ceramica rame
Copper ceramic

Ceramica bianca
White ceramic

Ceramica nera
Black ceramic

Design by Massimiliano Raggi

ÉTOILE

La danza è un'arte che sa donare emozioni, come in questa lampada. Una forma sinuosa, che esprime dinamicità, come solo le prime ballerine sanno fare. La stilizzazione dell'eleganza.

Dance is an art that knows how to evoke emotions, much like this lamp. It embodies a sinuous form that expresses dynamism, akin to the grace of prima ballerinas. A stylized embodiment of elegance.

ÉTOILE floor lamp bronze
ÉTOILE floor lamp silver

SICIS

ÉTOILE floor lamp

FLAMP
no. 2 x Strip LED 12 Watt · 590 LUMEN + 1 x MAX 40 Watt E27
IP 20
220 V Different voltage on request
CE Certification

Collezione / *Collection*

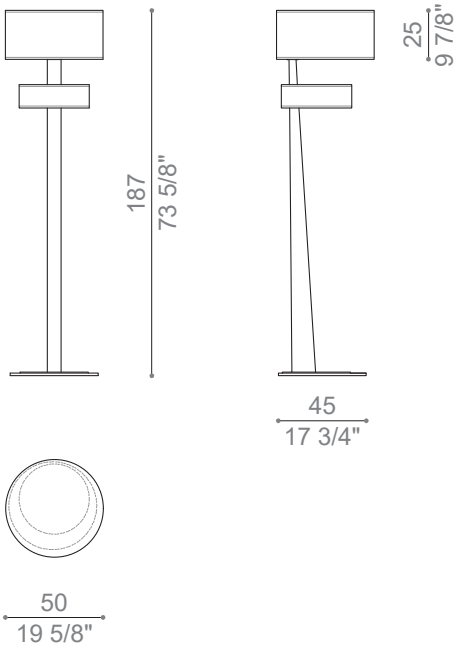

Floor lamp

Finiture / *Finishes*

Struttura / *Structure*

Bronzo antico
Antique bronze

Argento antico
Antique silver

Inserto in mosaico artistico / *Artistic mosaic insert*

Mosaico oro e platino
Gold and platinum mosaic

Mosaico platino e blu
Platinum and blue mosaic

Diffusore / *Diffuser*

Diffusore in tessuto
Fabric diffuser

Design by Massimiliano Raggi

BAUTA

Questa serie di lampade è caratterizzata da un raffinato paralume in tessuto e dettagli ricercati. Un'illuminazione chic, vagamente rétro, che diffonde una luce omogenea e calda.

This series of lamps is characterized by a refined fabric lampshade and intricate details. It offers chic lighting with a hint of retro charm, diffusing a warm and uniform light.

BAUTA ceiling lamp 02, 03 ivory

SICIS

BAUTA ceiling lamp 01 ivory
BAUTA wall sconce striped

BAUTA ceiling lamp 01 anthracite
BAUTA ceiling lamp 02, 03 ivory

SICIS

BAUTA ceiling lamp

LAMP 01
no.1 · Max 60 Watt E27 incl.
IP 20
220 V Different voltage on request
CE Certification

LAMP 02
no.1 · Max 60 Watt E27 incl.
IP 20
220 V Different voltage on request
CE Certification

LAMP 03
no.1 · Max 60 Watt E27 incl.
IP 20
220 V Different voltage on request
CE Certification

BAUTA wall sconce

WS
no.1 · Max 30 Watt E27 incl.
IP 20
220 V Different voltage on request
CE Certification

Collezione / *Collection*

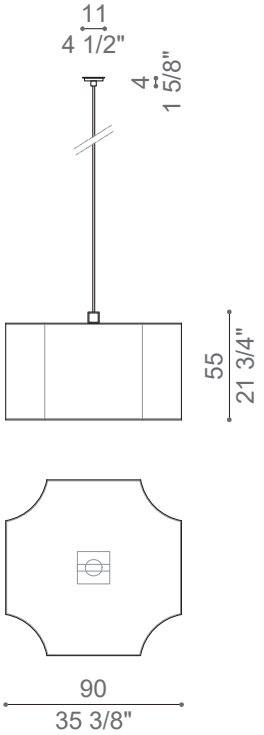

Ceiling lamp 01

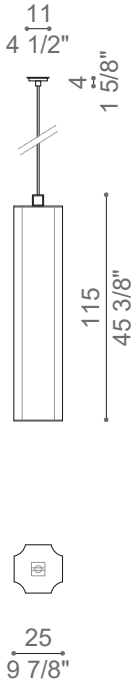

Ceiling lamp 02

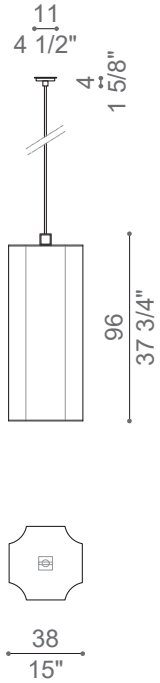

Ceiling lamp 03

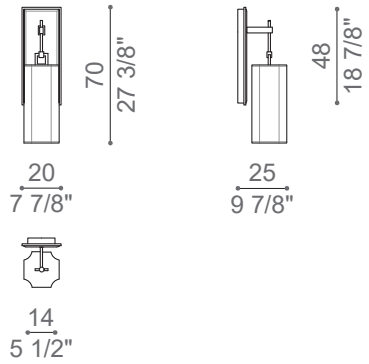

Wall sconce

Finiture / *Finishes*

Struttura / *Structure*

Bronzo antico
Antique bronze

Specchio bronzo
Bronze mirror

Diffusore / *Diffuser*

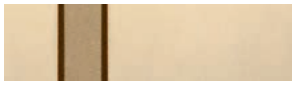

Tessuto chinette avorio
Ivory chinette fabric

Tessuto chinette millerighe
Striped chinette fabric

Tessuto chinette antracite
Anthracite chinette fabric

Design by Massimiliano Raggi

ODEON

Una libera interpretazione stilistica del futurismo. Tessuti, metalli e vetro combinati secondo uno speciale processo di lavorazione, artigianalità sapientemente evoluta per un lampadario innovativo e raffinato.

A free stylistic interpretation of futurism. Fabrics, metals, and glass are combined through a special manufacturing process, showcasing expertly evolved craftsmanship to create an innovative and refined chandelier.

ODEON ceiling lamp

SICIS

ODEON floor lamp
ODEON table lamp

SICIS

ODEON ceiling lamp

CLAMP
no.3 x Max 60 Watt E27 incl.
IP 20
220 V Different voltage on request
CE Certification

ODEON table lamp

TLAMP
no.1 x Max 60 Watt E27 incl.
IP 20
220 V Different voltage on request
CE Certification

ODEON floor lamp

FLAMP
no.1 x Max 60 Watt E27 incl.
IP 20
220 V Different voltage on request
CE Certification

Collezione / *Collection*

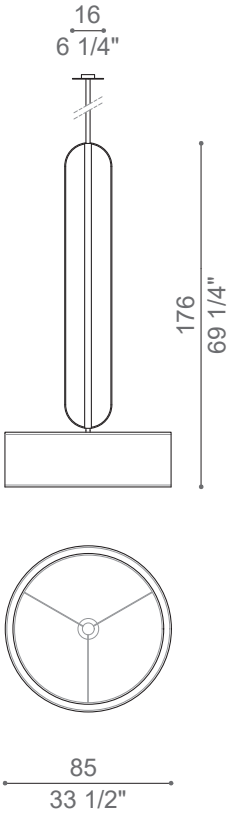

Ceiling lamp

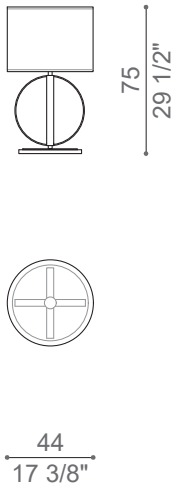

Table lamp

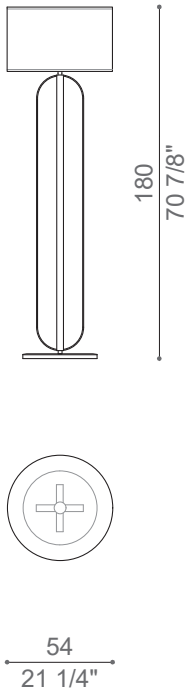

Floor lamp

Finiture / *Finishes*

Struttura / *Structure*

Ottone brunito
Bronzed brass

Vetro pirex ambra
Amber pyrex glass

Specchio bronzo
Bronze mirror

Diffusore / *Diffuser*

Rete metallica bronzo e tessuto avorio
Bronzed metal mesh and ivory fabric

Design by Massimiliano Raggi

PAGODA

OUTDOOR

La leggera stuttura in metallo opaco e il tessuto outdoor a tema botanico del paralume si legano in un connubio decorativo fresco e contemporaneo.

The light matte metal structure and the outdoor fabric lampshade with a botanical theme come together in a fresh and contemporary decorative combination.

PAGODA ceiling lamp · **OUTDOOR**

SICIS

PAGODA ceiling lamp · OUTDOOR

CL
1XMAX 19 WE27 LED
WARM WHITE 2700K
220 V Different voltage on request
CE Certification

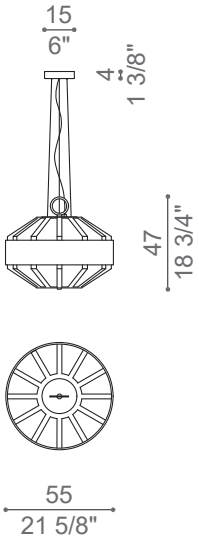

Ceiling lamp

Finiture / *Finishes*

Struttura / *Structure*

Metallo bianco opaco
White matt metal

TESSERE™
Go to the WebSite

Diffusore / *Diffuser*

Tessuto outdoor LABUAN ocean
LABUAN ocean outdoor fabric

Tessuto outdoor LABUAN jungle
LABUAN jungle outdoor fabric

Tessuto outdoor LABUAN sundance
LABUAN sundance outdoor fabric

Disponibile con tutti i tessuti outdoor della collezione Tessere.
Available with all outdoor fabrics from the Tessere collection.

Design by Mr. Christian Lacroix

AMALASONTE

THÉODELINDE ROSEMONDE

HONORIA GALLA PLACIDIA

LICINIA VALÉRIE

DÉSIDERIA

HÉLIE

Le sete preziose finemente lavorate e i legni masselli laccati lucidi sono gli elementi distintivi di questa serie di lampade. Oggetti preziosi con grande capacità di caratterizzare l'ambiente in cui sono inserite, con il fascino del passato reinterpretato in chiave contemporanea.

Finely crafted precious silks and glossy lacquered solid woods are the distinctive elements of this series of lamps. These precious objects have the ability to characterize the environment they are placed in, with the charm of the past reinterpreted in a contemporary key.

A. LACROIX
PARIS

HÉLIE ceiling lamp 120 red brocade
AMALASONTE table lamp red brocade

DÉSIDERIA ceiling lamp 80 yellow brocade
THÉODELINDE ROSEMONDE table lamp beige brocade

SICIS

HONORIA GALLA PLACIDIA floor lamp red brocade
LICINIA VALÉRIE floor lamp beige brocade

AMALASONTE table lamp

TLAMP
no.1 x Max 40 Watt E27 incl.
220 V Different voltage on request
CE Certification

THÉODELINDE ROSEMONDE table lamp

TLAMP
no.1 x Max 40 Watt E27 incl.
220 V Different voltage on request
CE Certification

LICINIA VALÉRIE floor lamp

FLAMP
no.1 · Max 40 Watt E27 incl.
220 V Different voltage on request
CE Certification

HONORIA GALLA PLACIDIA floor lamp

FLAMP
no.1 · Max 40 Watt E27 incl.
220 V Different voltage on request
CE Certification

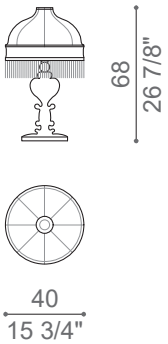

AMALASONTE
Table lamp

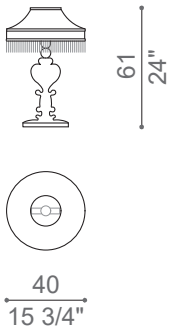

THÉODELINDE ROSEMONDE
Table lamp

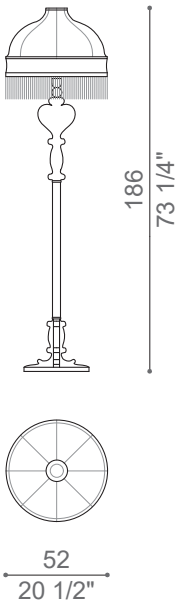

LICINIA VALÉRIE
Floor lamp

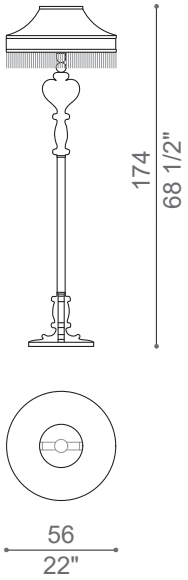

HONORIA GALLA PLACIDIA
Floor lamp

Finiture / *Finishes*

Struttura / *Structure*

Laccatura nero lucido
Black polished laquers

Diffusore / *Diffuser*

Broccato beige
Beige brocade

Broccato rosso
Red brocade

Broccato giallo
Yellow brocade

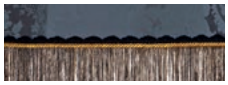

Broccato blue
Blue brocade

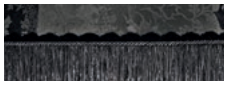

Broccato nero
Black brocade

DÉSIDERIA ceiling lamp

DESIDERIA 60
no.1 x Max 40 Watt E27 incl.
220 V Different voltage on request
CE Certification

DESIDERIA 80
no.1 x Max 40 Watt E27 incl.
220 V Different voltage on request
CE Certification

DESIDERIA 120
no.3 x Max 40 Watt E27 incl.
220 V Different voltage on request
CE Certification

HÉLIE ceiling lamp

HELIE 60
no.1 x Max 40 Watt E27 incl.
220 V Different voltage on request
CE Certification

HELIE 80
no.1 x Max 40 Watt E27 incl.
220 V Different voltage on request
CE Certification

HELIE 120
no.3 x Max 40 Watt E27 incl.
220 V Different voltage on request
CE Certification

Collezione / *Collection*

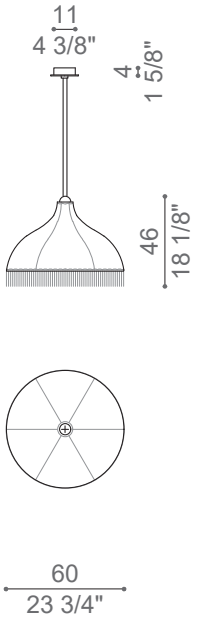

DÉSIDERIA 60
Ceiling lamp

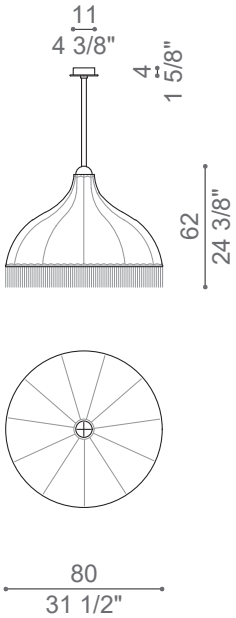

DÉSIDERIA 80
Ceiling lamp

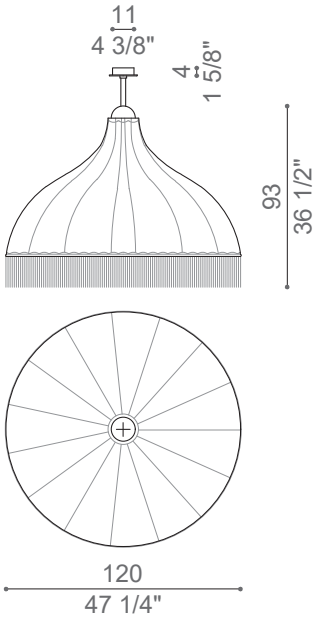

DÉSIDERIA 120
Ceiling lamp

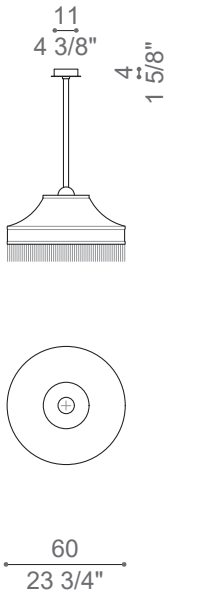

HÉLIE 60
Ceiling lamp

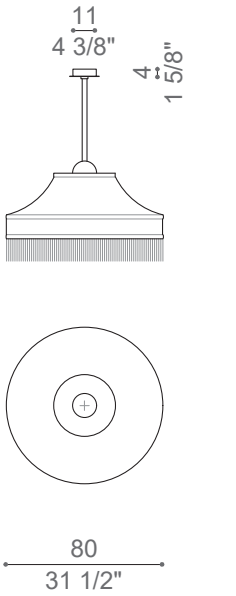

HÉLIE 80
Ceiling lamp

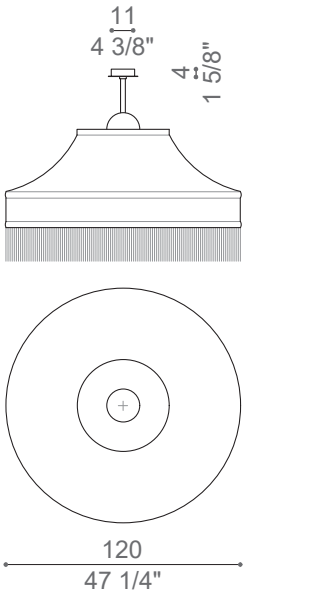

HÉLIE 120
Ceiling lamp

Finiture / *Finishes*

Struttura / *Structure*

Laccatura nero lucido
Black polished laquers

Diffusore / *Diffuser*

Broccato beige
Beige brocade

Broccato rosso
Red brocade

Broccato giallo
Yellow brocade

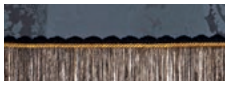

Broccato blue
Blue brocade

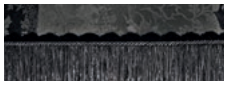

Broccato nero
Black brocade

Design by Massimiliano Raggi

PLAZA

L'alternanza delle fasce, le dimensioni dei paralumi e l'ampia gamma di tessuti, rendono queste lampade estremamente personalizzabili. Il risultato crea composizioni originali di grande dinamismo ed impatto.

The alternation of bands, the varying sizes of the lampshades, and the wide range of fabrics make these lamps highly customizable. The result is the creation of original compositions that are dynamic and impactful.

PLAZA ceiling lamp round 90, 120

PLAZA ceiling lamp square 90, 120

SICIS

PLAZA ceiling lamp round

RLAMP 90
no.3 x Max 60 Watt E27 incl.
220 V Different voltage on request
CE Certification

RLAMP 120
no.3 x Max 60 Watt E27 incl.
220 V Different voltage on request
CE Certification

PLAZA ceiling lamp square

SLAMP 90
no.3 x Max 60 Watt E27 incl.
220 V Different voltage on request
CE Certification

SLAMP 120
no.3 x Max 60 Watt E27 incl.
220 V Different voltage on request
CE Certification

Collezione / *Collection*

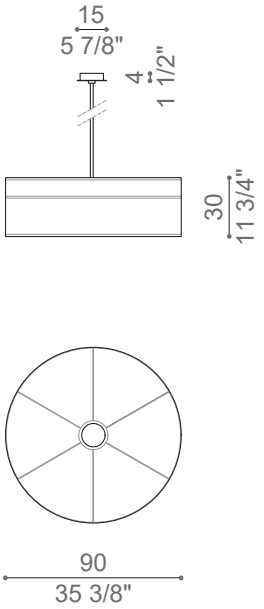

ROUND 90
Ceiling lamp

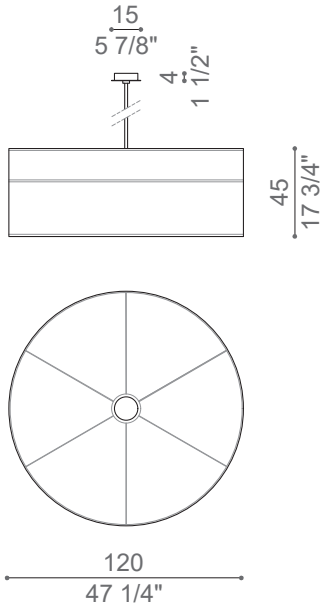

ROUND 120
Ceiling lamp

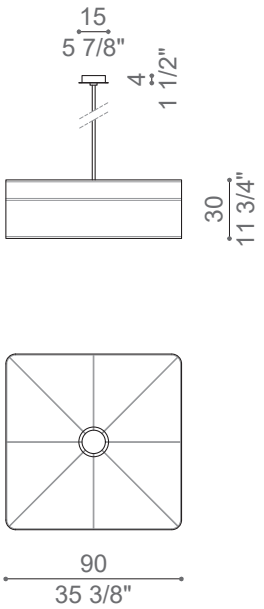

SQUARE 90
Ceiling lamp

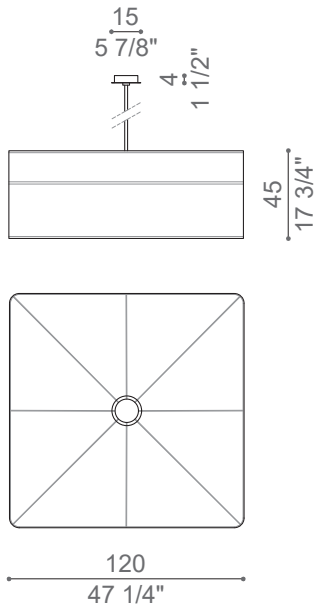

SQUARE 120
Ceiling lamp

TESSERE™
Go to the Catalogue

Finiture / *Finishes*

Struttura / *Structure*

Diffusore RLAMP 90
RLAMP 90 diffuser

Diffusore RLAMP 120
RLAMP 120 diffuser

Diffusore SLAMP 90
SLAMP 90 diffuser

Diffusore SLAMP 120
SLAMP 120 diffuser

Disponibile su richiesta con altri tessuti della collezione Tessere.
Available on request, with other fabrics from the Tessere collection.

OPERÀ

Applique con due luci in fusione di bronzo in stile Rococò, caratterizzata da intrecci sinuosi di foglie e rami tipici dello stile Luigi XV.
La finitura in avorio patinato trasforma un classico del passato in una lampada dal sapore contemporaneo.

Wall lamp with two lights made of bronze casting in Rococo style, characterized by sinuous interweaving of leaves and branches typical of the Louis XV style. The patinated ivory finish transforms a classic from the past into a lamp with a contemporary flavor.

OPERÀ wall sconce

SICIS

OPERÀ wall sconce

WS
no.2 x Max 40 Watt E14 incl.
220 V Different voltage on request
CE Certification

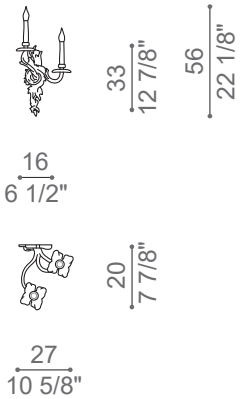

Wall sconce

Finiture / *Finishes*

Struttura / *Structure*

Avorio opaco patinato
Matt ivory patinated

LUMIÈRE

Lanterna da soffitto realizzata in fusione di bronzo rifinita in finitura champagne e vetro.
Caratterizzata da intrecci sinuosi di foglie e rami tipici dello stile Luigi XV, viene reintepretata per ambienti contemporanei.

A ceiling lantern crafted from cast bronze with a champagne finish and glass. Characterized by the sinuous interweaving of leaves and branches typical of the Louis XV style, it is reinterpreted for contemporary environments.

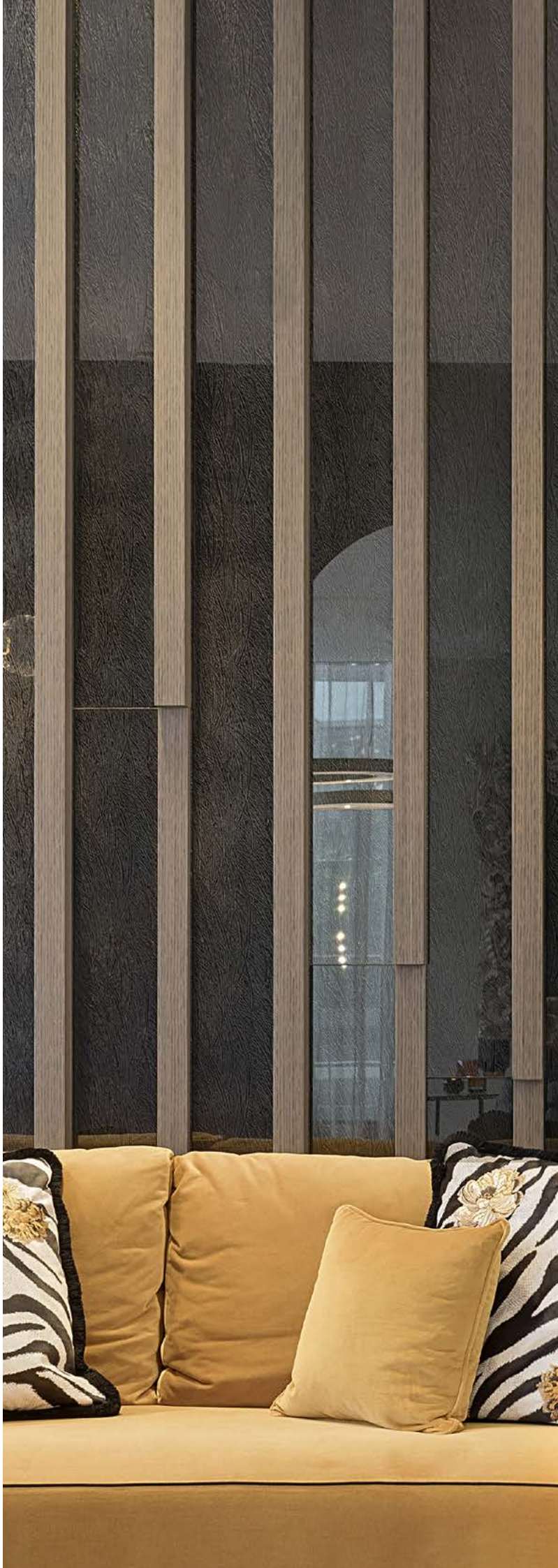

SICIS

LUMIÈRE ceiling lamp

CL
no.6 x 7 Watt LED WARM WHITE
220 V Different voltage on request
CE Certification

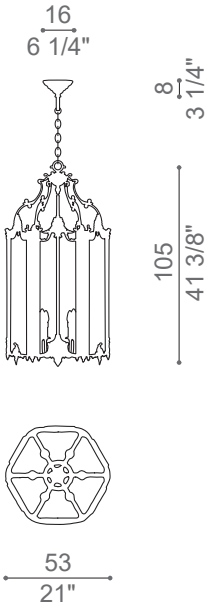

Ceiling lamp

Finiture / *Finishes*

Struttura / *Structure*

Champagne opaco
Matt champagne

Argento antico
Antique silver

Le collezioni di lampade SICIS sono ideate per illuminare e decorare sia gli spazi interni che quelli esterni attraverso le serie outdoor. Questa selezione di progetti mette in evidenza come, in particolare nel settore dell'hospitality, la personalizzazione dei corpi illuminanti sia un elemento estremamente importante.

SICIS ha la capacità di adattare le soluzioni di illuminazione alle specifiche esigenze di ogni ambiente, cosa che permette non solo una perfetta integrazione estetica, ma contribuisce a conferire carattere e unicità ad ogni progetto.

Attraverso un'accurata scelta dei materiali e un'attenzione meticolosa ai dettagli, SICIS trasforma ogni lampada in un'opera d'arte in grado di tramutare lo spazio in un'esperienza visiva e sensoriale unica.

SICIS lamp collections are designed to illuminate and decorate both indoor and outdoor spaces through their outdoor series.
This special selection of projects highlights how, especially in the hospitality industry, customization and personalization of lighting fixtures are extremely important elements to consider.

SICIS has the ability to tailor lighting solutions to the specific requirements of each environment, enabling not only seamless aesthetic integration but also imparting character and uniqueness to every project.

Through careful material selection and meticulous attention to detail, SICIS transforms each lamp into a work of art capable of turning space into a uniquely visual and sensory experience.

HOSPITALITY

PROJECT SELECTION

SICIS

#01

LUXURY HOTEL, ROME

BALLET ceiling lamps
1, 2, 3, 4, 5 bronze

SICIS

#02

GOLDEN LOUNGE HOTEL, HAMBURG

FLUXUS chandelier · **CUSTOM**

SICIS

#02

GOLDEN LOUNGE HOTEL, HAMBURG

BALLET ceiling lamp 1, 2, 3, 4, 5
FLUXUS wall sconces

SICIS

#03

CLUBHOUSE, SHANGHAI

GEMMA ring ceiling lamp 120
GEMMA ring ceiling lamp 90
GEMMA round ceiling lamp 90
GEMMA round ceiling lamp 60

SICIS

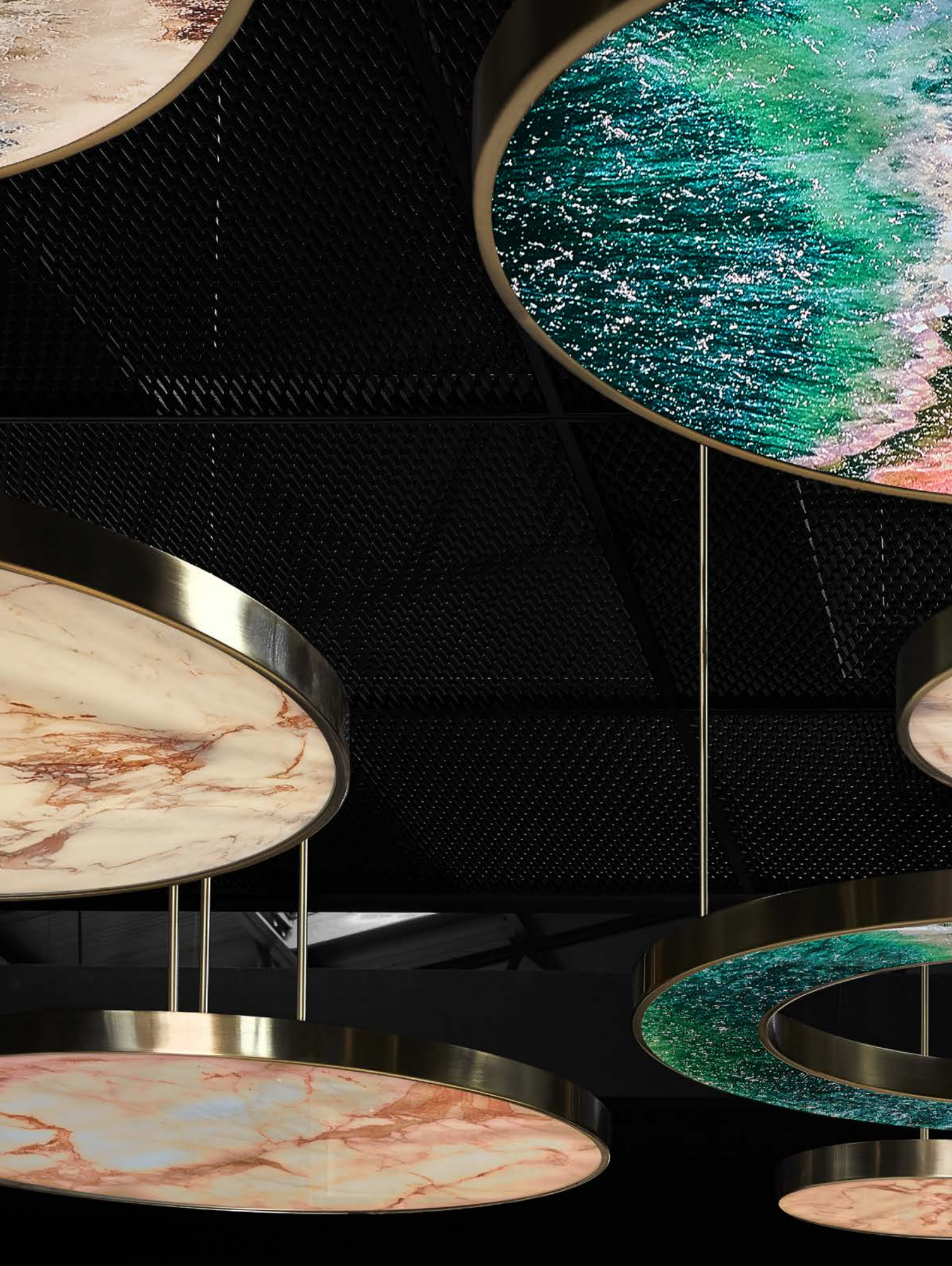

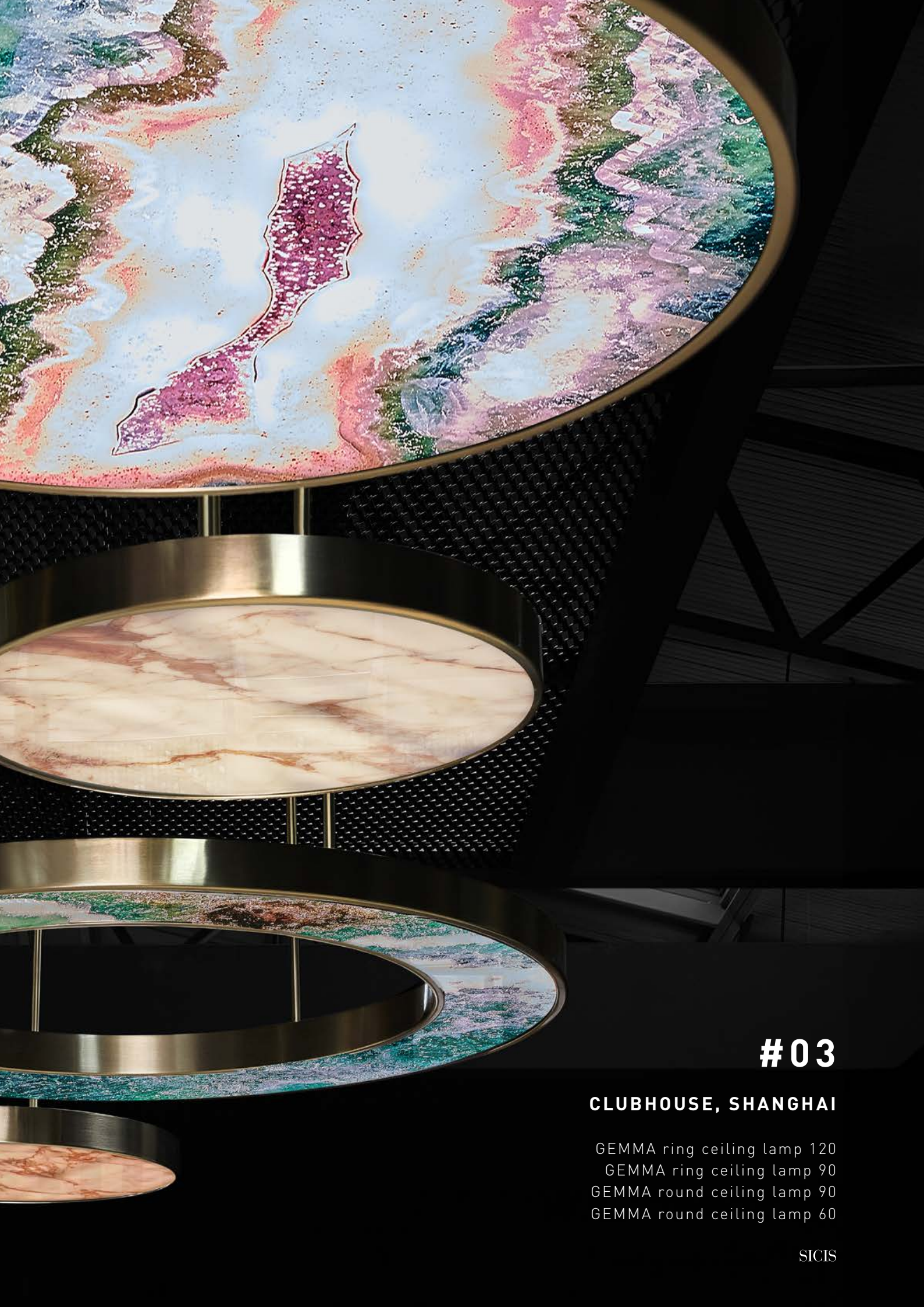

#03

CLUBHOUSE, SHANGHAI

GEMMA ring ceiling lamp 120
GEMMA ring ceiling lamp 90
GEMMA round ceiling lamp 90
GEMMA round ceiling lamp 60

SICIS

#04

SUITE HOTEL, SAMARCANDA

BALLET ceiling lamps 1, 2, 3, 4, 5, 6
POLO wall sconce · **CUSTOM**

LIFE AT THE EDGE

#04

SUITE HOTEL, SAMARCANDA

ANDROMEDA chandelier · **CUSTOM**

SICIS

#04

SUITE HOTEL, SAMARCANDA

BOHÈME ceiling lamp
BOHÈME wall sconce · **CUSTOM**

#04

SUITE HOTEL, SAMARCANDA

DROP battery lamp · **OUTDOOR**
BOHÈME chandelier · **OUTDOOR** · **CUSTOM**
BOHÈME ceiling lamp · **OUTDOOR** · **CUSTOM**

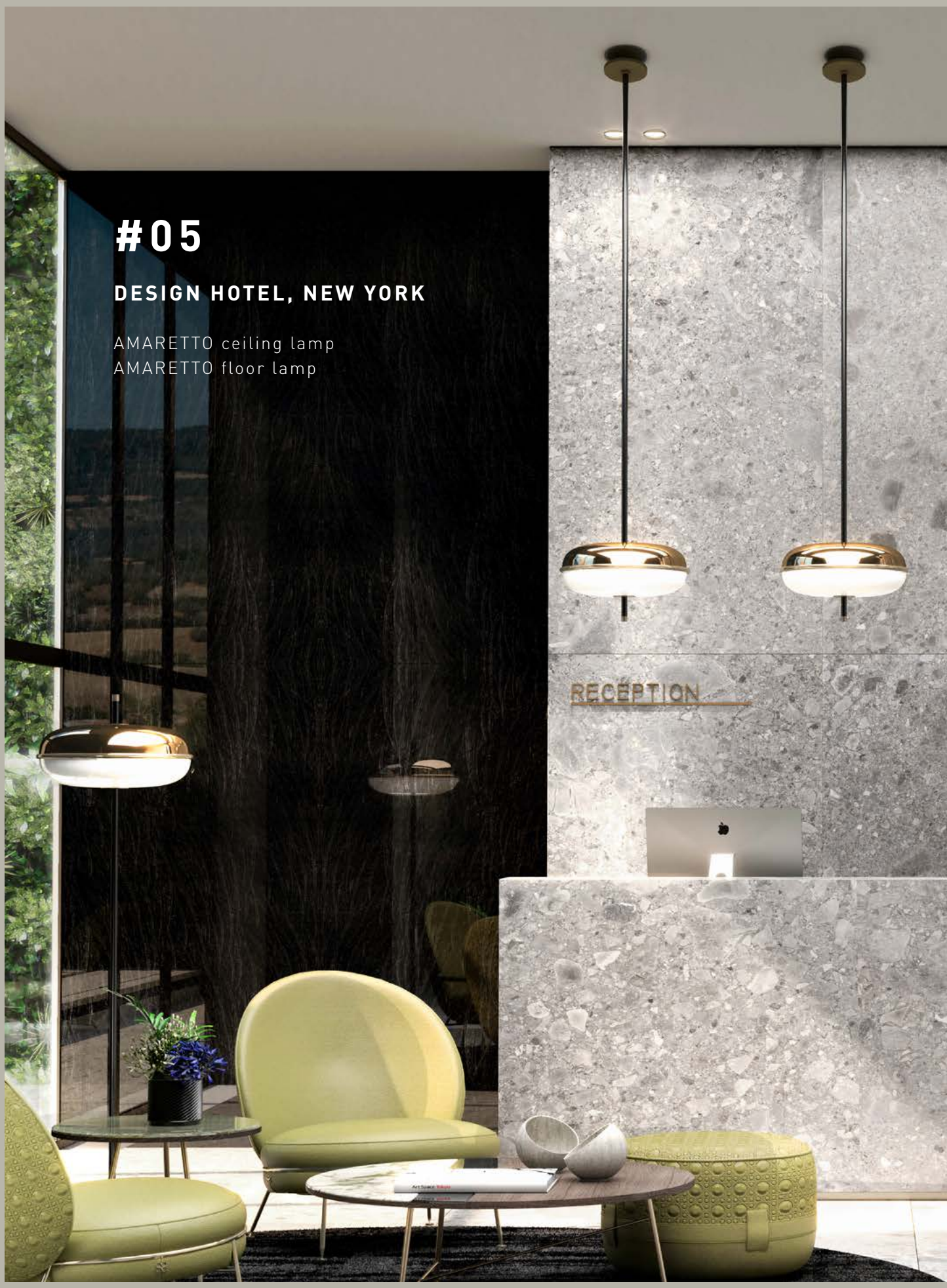

#05

DESIGN HOTEL, NEW YORK

AMARETTO ceiling lamp
AMARETTO floor lamp

211
215

#05

DESIGN HOTEL, NEW YORK

KATANA ceiling lamp horizontal
BALLET wall sconce · **CUSTOM**

#05

DESIGN HOTEL, NEW YORK

DROP ceiling lamp 01
DROP floor lamp

SICIS

#05

DESIGN HOTEL, NEW YORK

DROP wall sconces · **CUSTOM**

#06

RESTAURANT, PARIS

GEMMA ring ceiling lamp 90
GEMMA round ceiling lamp 90
GEMMA round ceiling lamp 60

SICIS

#06

RESTAURANT, PARIS

GEMMA ring ceiling lamp 90
GEMMA round ceiling lamp 90
GEMMA round ceiling lamp 60

MATERIALS AND FINISHINGS

SICIS

VETRITE - GEMGLASS

Agata Blue

Crimson

Mahogany

Vulcano

Agata Lilla

Crystallised

Neve

Waves

Aurora

Fable

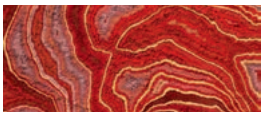
Pangea Red

Bloomer

Frost

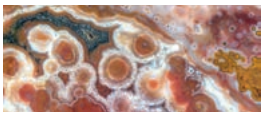
Punctum

Boulder

Galaxy

Reef

Canyon

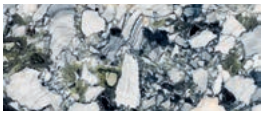
Grain

River

Cave

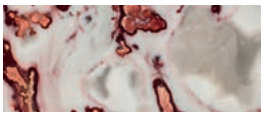
Ignite

Rock

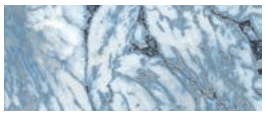
Chroma

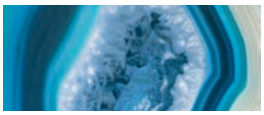
Lagoon

Sepia

Cliff

Lake

Solferino

Clouds

Landscape

Sunburst

Corundum

Lignin

Terrain

Crate

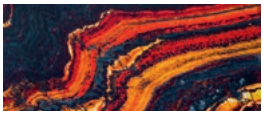
Magma

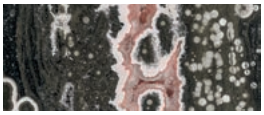
Unakite

VETRITE®
Go to the WebSite

Formato - *Slab size*
120 x 280cm - 47 1/4"x 110 1/4"
Formato speciale - *Special slab size*
135 x 290cm - 53 1/8"x 114 1/8"

VETRITE - SIGHT

Accra 01

Accra 02

Dubai 01

Hanoi 01

Hanoi 02

Hanoi 02 B&W

Los Angeles 01

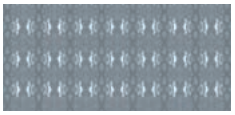
Los Angeles 02

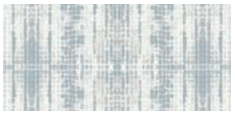
Milano 01

Milano 02

Roma 01

Roma 02

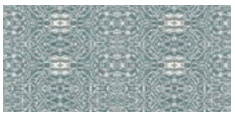
Shanghai 01

Shanghai 02

Venezia 01

Venezia 02

Formato - *Slab size*
120 x 280cm - 47 1/4"x 110 1/4"
Formato speciale - *Special slab size*
135 x 290cm - 53 1/8"x 114 1/8"

VETRITE - ONIGEM

Avory

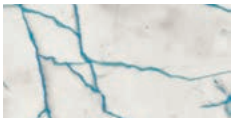
Bolt

Deep blue

Dusk

Emerald

Giada

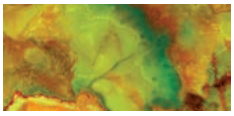
Green

Honey

Mocha

Nebula

Ocean

Petroleum

Pink

Rice

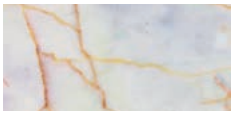
Spider

Twilight

Formato - *Slab size*
120 x 280cm - 47 1/4"x 110 1/4"
Formato speciale - *Special slab size*
135 x 290cm - 53 1/8"x 114 1/8"

VETRITE - ELECTRIC MARBLE

Electric Marble Cal Gold

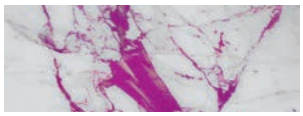
Electric Marble Cal Fuxia

Electric Marble Cal Natural

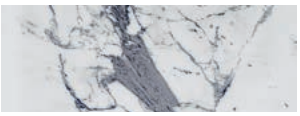
Electric Marble Cal Silver

Electric Marble Cal Turchese

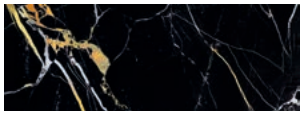
Marquina Black

Formato - *Slab size*
120 x 280cm - 47 1/4"x 110 1/4"
Formato speciale - *Special slab size*
135 x 290cm - 53 1/8"x 114 1/8"

LEGNI / *WOODS*

LEGNO LUCIDO / POLISHED WOOD

Ebano macassar
Macassar ebony

Rovere grigio
Grey oak

Ebano ammara
Ammara ebony

LEGNO OPACO / MATT WOOD

Ebano macassar
Macassar ebony

Rovere grigio
Matt grey oak

Ebano ammara
Ammara ebony

METALLI, SPECCHI / *METALS, MIRROR*

METALLI LUCIDI / POLISHED METALS

Cromo
Chrome

Champagne
Champagne

Nichel nero
Black nichel

Oro
Gold

METALLI SATINATI / *SATIN METALS*

Argento
Silver

Champagne
Champagne

Nichel
Nickel

METALLI OPACHI / MATT METALS

Champagne
Champagne

Ottone Brunito
Bronzed Brass

Nichel Bronzo
Nickel Bronze

MIRRORS / SPECCHI

Naturale
Natural

Fumè
Smoke

Bronzo
Bronze

Nero
Black

LACCATURE / LACQUERS

LACCATI PATINATI / DISTRESSED LACQUERS

Champagne
Champagne

Oro Antico
Antique Gold

Bronzo antico
Antique bronze

Argento antico
Antique silver

LACCATI METALLIZ. OPACHI / MATT METALLIC LACQUERS

Grigio cenere
Ash grey

Grigio vulcano
Volcano grey

Grigio lava
Lava grey

LACCATI LUCIDI METALLIZ. / POLISHED METALLIC LACQUERS

Ash Grey
Grigio Cenere

Volcano Grey
Grigio Vulcano

Lava Grey
Grigio Lava

LACCATI OPACHI / MATT LACQUERS

Avorio
Ivory

Grigio
Grey

Tortora
Taupe

Alabastro
Alabaster

Cappuccino
Cappuccino

Dark Brown
Marrone Scuro

Senape
Mustard

Cannella
Cinnamon

Avio
Avio

Black
Nero

LACCATI LUCIDI / POLISHED LACQUERS

Avorio
Ivory

Grigio
Grey

Tortora
Taupe

Alabastro
Alabaster

Cappuccino
Cappuccino

Dark Brown
Marrone Scuro

Senape
Mustard

Cannella
Cinnamon

Avio
Avio

Black
Nero

LEGAL NOTICE
By retaining this SICIS catalogue, you acknowledge and agree to the following:
This catalogue is and remains the property of SICIS s.r.l. (“SICIS”).
SICIS reserves the right, at any time, to request the return of this catalogue.
The catalogue is provided to you FREE OF CHARGE and is NOT FOR RESALE. If you paid for this catalogue, please write to SICIS at the address provided below.
Copyright laws protect the content of this catalogue, including, without limitation, the photographs, images, text, layout and designs contained therein.
The reproduction or copying of any part of this catalogue, including, without limitation, the photographs, images, text, layout and designs contained therein, IS PROHIBITED, and legal action may be commenced against anyone, including, but not limited to, yourself, who violates this prohibition.
By giving you a copy of this catalogue, SICIS is not thereby giving you any license, either implied or express, to reproduce or copy it or any parts of it, in any way.
The trademark SICIS® is a registered trademark and the property of SICIS s.r.l., and is protected under domestic and international laws.
SICIS reserves all its rights and remedies.

AVVISO LEGALE
Ricevendo il presente catalogo SICIS, prendi atto ed accetti i seguenti termini e condizioni:
Il presente catalogo è e rimane di proprietà di SICIS s.r.l. (“SICIS”).
SICIS si riserva il diritto, in qualsiasi momento, di richiederne la restituzione.
Il catalogo è fornito a TITOLO GRATUITO e NON ne è AUTORIZZATA LA RIVENDITA. Se hai dovuto pagare per questo catalogo, ti preghiamo di segnalarcelo scrivendoci all’indirizzo riportato di seguito.
Le leggi in materia di diritto d’autore (Copyright) proteggono il contenuto del presente catalogo, inclusi, senza alcuna limitazione, le fotografie, immagini, testi, layout ed i disegni in esso contenuti.
La riproduzione o la copia di qualsiasi parte del presente catalogo, inclusi, senza alcuna limitazione, le fotografie, immagini, testi, layout ed i disegni in esso contenuti, È VIETATA, e SICIS si riserva il diritto di intraprendere azione legale nei confronti di chiunque (incluso te) violi il presente divieto.
L’aver ricevuto una copia del presente catalogo, non dà diritto in alcun modo ad alcuna licenza da parte di SICIS, né implicita né tantomeno espressa, di riprodurre o copiare, in qualsiasi modo o forma, alcuna parte di esso.
Il marchio SICIS® è un marchio registrato e di proprietà della SICIS s.r.l., ed è protetto dalle leggi nazionali ed internazionali in materia.
SICIS espressamente si riserva tutti i diritti e rimedi.

www.sicis.com · info@sicis.com
SICIS · Sede Legale · Via Borgonuovo, 29 · 20121 Milano (Italy)
Sicis s.r.l. Ravenna (Italy) - July 2024

© 2019-2020-2021-2022-2023-2024 Sicis S.r.l.
SICIS® is trademark of Sicis S.r.l.
SICIS® è un marchio di Sicis S.r.l.

SICIS ITALY
Showroom Milano
20121 · Via Fatebenefratelli, 8
Ph. +39 02 87 60 99
Showroom & Factory Ravenna
48123 · Via Canala, 85
Ph. +39 0544 469 711 · Fax +39 0544 46 98 11

SICIS FRANCE
Showroom Paris
19, rue Marbeuf 75008
Ph. +33 01 49 52 89 89

SICIS UNITED KINGDOM
Showroom & Offices London
15A Dover St, Mayfair, W1S 4LR
Ph. +44 207 491 9849

SICIS SWISS
Sicis Store Sant’Antonino
Via Stazione, 23 - 6592
Ph. +41 91 985 34 57

SICIS NORTH AMERICA
Corporate Headquarters New York
150 Bruckner Blvd, Bronx 10454
Ph. 212 965 4100
877 839 8900 (Toll Free)

SICIS ME
Showroom Dubai
57RW+4MR - Dubai Design District
United Arab Emirates
Ph. +971 50 5270183

SICIS®

www.sicis.com
made in Italy

www.sicis.com